Barkhausen Noise in a Relaxor Ferroelectric

Eugene V. Colla, Lambert K. Chao, and M. B. Weissman*
Department of Physics, University of Illinois at Urbana-Champaign, 1110 West Green Street, Urbana, Illinois 61801-3080
(Received 9 July 2001; published 19 December 2001)

Barkhausen noise, including both periodic and aperiodic components, is found in and near the relaxor regime of a familiar relaxor ferroelectric, $PbMg_{1/3}Nb_{2/3}O_3$, driven by a periodic electric field. The temperature dependences of both the amplitude and spectral form show that the size of the coherent changes in the dipole moment shrink as the relaxor regime is entered, contrary to expectations based on some simple models.

DOI: 10.1103/PhysRevLett.88.017601 PACS numbers: 77.80.Dj, 72.70.+m, 77.80.Bh, 77.84.Dy

Although relaxor ferroelectrics form locally ferroelectric polar nanodomains, underlying chemical disorder somehow prevents the formation of long-range ferroelectric or antiferroelectric order [1]. Instead, there is a crossover, characterized by faster-than-Arrhenius temperature dependence of relaxation rates (approximately of the Vogel-Fulcher form, e.g., [2]), to a glassy "relaxor" regime. The key ingredients of a successful model may include static random polar fields (e.g., [3]), random anisotropy (e.g., [4]), random interactions among the polar nanodomains (e.g., [4–7]), and interactions with soft TO phonons [7–9] and slow charge-transfer modes [9].

Nonequilibrium noise and mesoscopic noise provide model-sensitive probes of glassy freezing [10,11], unlike macroscopic linear response and the corresponding equilibrium fluctuations, which show rather generic properties. The Barkhausen effect (see, e.g., [12]) arises because the polarization changes unevenly as an applied field changes, with the random part of the response only statistically similar between nominally identical samples. For two materials with similar average response functions, the Barkhausen noise will be larger for the material whose polarization makes larger coherent changes.

Although simple pictures of interacting polar nanodomains would predict that the dynamically coherent units grow as the frozen regime is entered, a previous attempt to find Barkhausen noise in the relaxor regime found none, setting an upper limit on the cooperative changes of the dipole moment [11]. Large discrete steps in polar order have been found in the best-studied relaxor, $PbMg_{1/3}Nb_{2/3}O_3$ (PMN), but only after the applied dc electric field was large enough to drive the material into an ordinary ferroelectric regime with macroscopic domains [3]. Here we report Barkhausen noise in the *nonferroelectric* (paraelectric and relaxor) regimes of PMN, where conventional Barkhausen noise from macroscopic domains is absent.

The simplest Barkhausen model [13] consists of a set of polarization steps at fixed fields distributed with uniform probability over the field sweep range. For periodically driven fields, the noise consists of a periodically repeated random walk, so $S(f)$, the Fourier power spectral density of the voltage fluctuations, will consist only of harmonics of the driving frequency f_D, and its spectral envelope will decay as $1/f^2$. If the step pattern changes between cycles (e.g., due to thermal jitter in the step times) then there will be aperiodic noise too. For fast-relaxing domains which remain in quasiequilibrium as the field changes, the polarization steps follow the smooth change in Boltzmann factor vs time (on a coarse time scale), causing the $1/f^2$ envelope to cut off rapidly $[\mathrm{csch}^2(\pi f/f_C)]$ above a characteristic frequency f_C [11]:

$$f_C \equiv f_D \frac{pE_D}{k_B T}. \tag{1}$$

(Here E_D is the maximum amplitude of the sinusoidal driving field, p is the typical change in electric dipole moment in a single step, and k_B is Boltzmann's constant.) For domains with large barriers to switching, the switches occur as single abrupt steps. However, thermal jitter in the timing of otherwise reproducible steps also reduces the periodic component above f_C, with a (numerically computed) envelope very similar to that for the fast switchers. The missing harmonic power should appear as an aperiodic component of roughly Lorentzian shape and corner frequency comparable to f_C.

When this simple independent-step picture applies, the voltage variance [the integral of $S(f)$] will grow linearly with E_D (so long as $f_C \gg f_D$), being [11]

$$\langle(\delta V)^2\rangle \approx \frac{pE_D}{\varepsilon C_o}. \tag{2}$$

Here C_o is the geometrical capacitance, and we assume the dimensionless dielectric constant $\varepsilon \gg 1$. When there is a range of p's, p in Eq. (2) is replaced by $\langle p^2\rangle/\langle p\rangle$.

Generically, if the non-Arrhenius slowing down of relaxation rates arises because interacting nanodomains form clusters which reorient coherently but with barriers which increase with cluster size (e.g., as in the random-field Ising model [14]), then the dipole moments of the coherent clusters (even if the constituents are randomly aligned) would grow as T was reduced, causing $\langle(\delta V)^2\rangle$ and f_C to rise. If the activation barrier heights for some clusters become too large for them to respond at or near f_D for a given E_D, then the typical p would saturate near the moment

 © 2001 The American Physical Society

of the largest responding clusters. The size of the largest responding cluster would shrink slightly as T is reduced further, but only as T to a power less than 1. We found neither continued growth nor approximate saturation of the noise magnitude and frequency range, but instead abrupt shrinkage.

Our sample consisted of two pieces, each about 0.75 mm thick, from a single crystal of PMN, grown by the Chokhralsky method at the Rostov-on-Don Institute of Physics. The sputtered gold contact pads on the main (001) faces had about 1 mm^2 surface area each.

Standard ac susceptibility measurements at 50 Hz showed the usual PMN relaxor behavior, as shown in Fig. 1. The response was close enough to linear over the field range employed in the noise experiments for the linear susceptibility to suffice for approximate calculations. Previous experiments [15] have shown that the apparent Vogel-Fulcher freezing temperature of PMN ($\approx$220 K) determined by ac response is essentially unchanged over the field range used in these experiments, although it drops sharply at higher fields.

For the noise measurements, the two halves of the sample were incorporated in a balanced-bridge circuit, as shown in Fig. 2. This setup allowed us to apply an ac bias up to 10 V on each half of the sample without overloading the low-noise amplifiers, despite the generation of harmonics by the sample nonlinearity, slow capacitance changes due to systematic aging effects [16], and imperfect common-mode rejection. However, any residual systematic differences in the nonlinearity of the two parts would generate harmonics. An experiment in which one sample arm was replaced with a polystyrene capacitor indicated significant systematic harmonics out to the fifth harmonic. We avoided using harmonics lower than the tenth in the data analysis, since systematic nonlinearities are distinct from Barkhausen noise. The ac source has very low levels of noise and distortion, and the analog-to-digital sampling is synchronized well with the ac drive.

Figure 3 shows a typical $S(f)$ with, roughly as expected, a mixture of periodic and broad aperiodic noise.

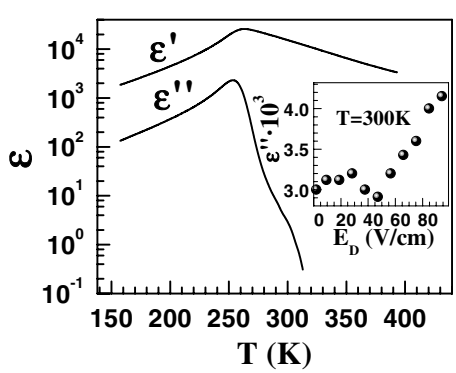

FIG. 1. $\varepsilon'(T)$ and $\varepsilon''(T)$ at 50 Hz, measured at 13 V/cm. The inset shows the nonlinear out-of-phase response, most apparent at high-T where the linear out-of-phase response is tiny.

The wings around f_D (and to a lesser extent around low harmonics) were not anticipated, but these can arise from small drifts in the bridge cancellation as the sample ages. The size of the polarization events, calculated below from $S(f)$, was far too small for them to be discerned individually.

Since the spectral form is close to the independent-step expectation, we can extract a typical step size p, although we doubt that the polarization changes literally consist of simple discrete steps. As shown in Fig. 4, both periodic and aperiodic components of the noise grow nonlinearly with E_D over the range explored. Thus the p calculated at some E_D gives only a typical dipole step size under the particular drive conditions. The form of the nonlinearity suggests a broad distribution of p's, with many small p's showing up in the noise only as E_D is increased enough to make $f_C > f_D$ for that p. The form of the aperiodic spectrum indicates a similar distribution.

Although we are not yet confident in extracting absolute step sizes from this new technique (mainly due to the difficulty of removing all artifacts from the lower harmonics, which contain the most power), we can use Eq. (2) to calculate a lower-bound estimate for a typical p by integrating the broad aperiodic spectrum only. (We assume this p reflects about how big the cooperative changes are regardless of whether they are simple discrete steps.) At $T = 250$ K, just above the relaxor regime, at the largest E_D used, the result is about $p = 2 \times 10^{-22}$ C cm, which apparently would grow at higher E_D. Under the same conditions, the envelope of the harmonic noise has a $1/f^2$ tail extending from about 1 to 4 kHz, the top of our measured range, indicating that there are some discrete dipole switches as large as 2×10^{-21} C cm. An order-of-magnitude estimate of the moment of a polar nanodomain at 250 K, based on the range of the static polar correlations [17] and the saturation polarization [18], would be about 3×10^{-23} C cm.

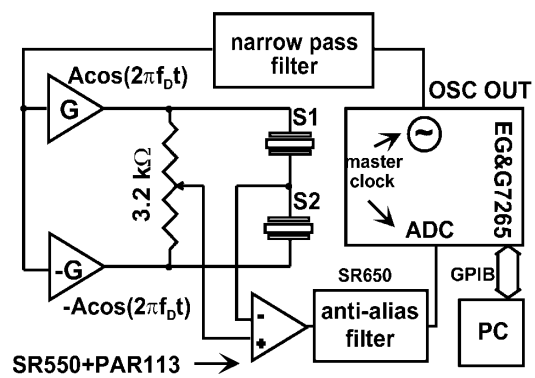

FIG. 2. The schematic diagram of the Barkhausen measurement circuit. A trimming capacitor in the balance circuit has been omitted to avoid clutter. S1 and S2 are the sample halves. $\pm$G is the gain of the driving op amps. Data were taken on the 14-bit converter in sets of 30 000 points with a 10 kHz sampling rate, giving 1/3 Hz frequency bins in the Fourier spectrum. Usually 16 such spectra were averaged. The anti-alias filter corner frequency was 5 kHz, although it should have been 4 kHz.

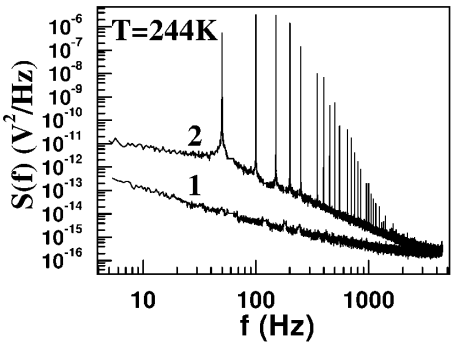

FIG. 3. $S(f)$ with $E_D = 130$ V/cm at $f_D = 50$ Hz at 244 K (spectrum 2) is shown above a background (spectrum 1) consisting of equilibrium noise from the dissipative sample plus amplifier noise, mainly from current noise from the Stanford 550 preamp. The harmonics of 60 Hz have been edited out.

Thus it seems that even in the *paraelectric* regime there are some dynamically coherent units larger than single polar nanodomains.

Despite the uncertainties in the absolute calibration, we can obtain a good indication of how typical p's depend on T, a key issue for relaxor models. For independent steps, the quantity $\varepsilon'(\delta V)^2$ is proportional to the actual p's under particular experimental conditions. Figure 5 shows how some periodic and aperiodic components of $\varepsilon'(\delta V)^2$ depend on T at fixed E_D. We pick spectral components in an octave around $f = 15 f_D$, because in this range the signal-to-background is still good, we expect few artifacts in the harmonics, and the T dependence of p shows up in $S(f)$ both via the overall magnitude and via the T dependence of f_C. (Other frequency components show the same sort of behavior, just less clearly.)

As seen in Fig. 5, as the relaxor regime is approached from high T, the spectral components of $\varepsilon'(\delta V)^2$ either rise slowly, as one would guess from the growth of medium-range static correlations [17], or show little change. However, below 235 to 250 K, both periodic and aperiodic components drop sharply, in sharp contrast to the continued growth of static correlations. The factor $\varepsilon'(T)$ accounts for less than half of this drop.

The width of the envelope of the harmonic components is also T dependent, being largest (for $E_D = 110$ V/cm) at 250 K. In contrast to the long $1/f^2$ tail at 250 K, below 250 K the harmonics fell sharply into the anharmonic background, e.g., becoming undetectable above about 900 Hz at 210 K, confirming that the largest dipole moment steps occur near 250 K.

In summary, our noise results indicate abrupt shrinkage of the typical net dipole moment of the dynamically coherent changes (at fixed driving field) as the relaxor regime is entered. We do not want to burden this experimental result with much theory, but some initial comments should be helpful.

We know of no proposed model in which the coherent dipole moment differences between the *equilibrium* states at different fields would shrink sharply in the relaxor regime (i.e., relaxors are not believed to be frustrated antiferroelectrics). Rather, the shrinkage of the steps found on a fixed frequency scale should be related to the Vogel-Fulcher kinetics [2,7], i.e., to the rapid growth of barrier heights as the relaxor regime is approached. Although our results do not dictate a model for the relaxor transition in PMN, we can rule out some models.

A model of the dynamics with a fixed set of relaxation modes with a fixed broad unimodal distribution of activation barriers (presumably monotonically increasing in p) [19] would predict that the characteristic p is a weakly increasing function of T at all T, and hence is inconsistent with our results. For simple growth of independent polar nanodomains, the dipoles grow along with the anisotropy barriers, so the typical dipole moment for which the field (plus thermal activation) allows switches at rates of order

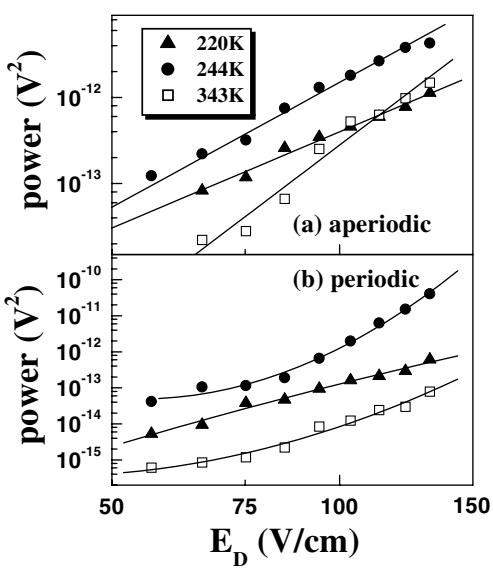

FIG. 4. Noise power (above the relevant backgrounds) in the octave from 512 to 1024 Hz as a function of E_D for (a) aperiodic and (b) periodic components.

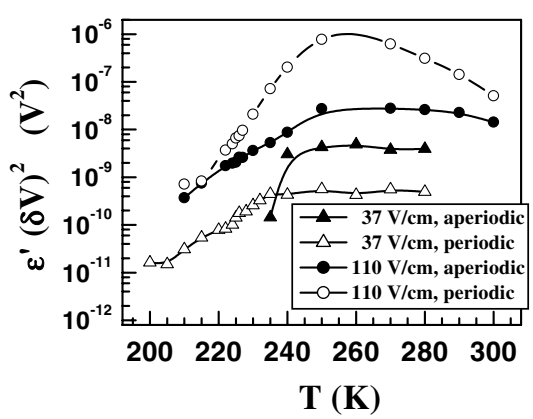

FIG. 5. The magnitudes of periodic and aperiodic spectral components (above the relevant backgrounds) in the range 512 to 1024 Hz, weighted by $\varepsilon'(T)$, are shown vs T at two different E_D.

f_C would continue to grow. For formation of coherently flipping clusters, the typical moment also grows with the number of nanodomains (probably as a square root). Although the moment to barrier ratio would be lower for larger clusters, the moment of the largest clusters with rapid enough driven kinetics would approximately saturate. Unless there was a strange distribution of cluster sizes, so that as the typical size grew, the mean of those remaining below some fixed cutoff would shrink, such models would not reproduce our results.

Thus the Barkhausen results strongly suggest that the rapid growth of barriers is not just the result of nanodomain growth or of collective nanodomain clusters forming. Instead, it seems that each nanodomain's contribution to the barriers grows much more rapidly than its contribution to the dipole moment, as in a recent phenomenological model [7], suggesting that less-polar degrees of freedom are freezing along with the polar nanodomain orientations. Another indication of some such effects is that the low-temperature linear heat capacity specifically associated with the relaxor [20] gives a dimensionless entropy of about 10^3 per nanodomain.

Models of relaxor freezing invoking strong coupling of nanodomain polarization to multiple slow local degrees of freedom (particularly charge transfers) and to soft TO phonon modes [8] have been proposed to account for clusters with multiple metastable polarization states having a roughly uniform distribution in solid angle [9]. Such models would allow complex aging [16] even in small clusters of nanodomains. Whether or not such models prove successful, the Barkhausen data provide a new qualitative constraint on models for the relaxor transition, which has thus far provided a target for somewhat underconstrained theory.

This work was funded by NSF DMR 99-81869.

*Electronic address: mbw@uiuc.edu

[1] L. E. Cross, Ferroelectrics **76**, 241 (1987); **151**, 305 (1994).
[2] A. Levstik, Z. Kutnjak, and C. Filipič, and R. Pirc, Phys. Rev. B **57**, 11 204 (1998).
[3] V. Westphal, W. Kleemann, and M. D. Glinchuk, Phys. Rev. Lett. **68**, 847 (1992); E. V. Colla, E. Y. Koroleva, N. M. Okuneva, and S. B. Vakhrushev, Phys. Rev. Lett. **74**, 1681 (1995).
[4] T. Egami, Ferroelectrics **222**, 163 (1999).
[5] D. Viehland, S. Jang, L. E. Cross, and M. Wuttig, Philos. Mag. B **64**, 335 (1991).
[6] R. Blinc *et al.,* Phys. Rev. Lett. **83**, 424 (1999).
[7] B. E. Vugmeister and H. Rabitz, Phys. Rev. B **61**, 14 448 (2000).
[8] P. M. Gehring, S. E. Park, and G. Shirane, Phys. Rev. Lett. **84**, 5216 (2000).
[9] V. S. Vikhnin, R. Blinc, and R. Pirc, Ferroelectrics **240**, 1621 (2000).
[10] M. B. Weissman, Annu. Rev. Mater. Sci. **26**, 395 (1996).
[11] K. P. O'Brien, M. B. Weissman, D. Sheehy, and D. D. Viehland, Phys. Rev. B **56**, R11 365 (1997); K. P. O'Brien, Ph.D. thesis, University of Illinois at Urbana-Champaign, 1997.
[12] V. M. Rudyak, Usp. Fiz. Nauk **101**, 429 (1970) [Sov. Phys. Usp. **13**, 461 (1971)].
[13] F. Preisach, Z. Phys. **94**, 277 (1935).
[14] D. A. Huse and D. S. Fisher, Phys. Rev. B **35**, 6841 (1987).
[15] E. V. Colla, S. M. Gupta, and D. Viehland, J. Appl. Phys. **85**, 362 (1999).
[16] E. V. Colla, L. K. Chao, and M. B. Weissman, Phys. Rev. B **63**, 134107 (2001).
[17] S. Vakhrushev *et al.,* J. Phys. Chem. Solids **57**, 1517 (1996); H. You, J. Phys. Chem. Solids **61**, 215 (2000); M. Yoshida *et al.,* Ferroelectrics **217**, 327 (1998).
[18] V. A. Bokov and I. E. Myl'nikova, Fiz. Tverd. Tela **3**, 841 (1961) [Sov. Phys. Solid State **3**, 613 (1961)].
[19] A. K. Tagantsev, Phys. Rev. Lett. **72**, 1100 (1994).
[20] E. Hegenbarth, Ferroelectrics **168**, 25 (1995).