Parametric Oscillation in Sodium Vapor

D. Grandclément, G. Grynberg, and M. Pinard
Laboratoire de Spectroscopie Hertzienne de l'Ecole Normale Supérieure, Université Pierre et Marie Curie,
75252 Paris Cedex 05, France

(Received 1 December 1986)

The properties of a beam generated by self-oscillation due to four-wave mixing in a cavity are described. The experiment is performed in sodium vapor, in continuous-wave regime. This system exhibits an unusually low threshold condition. The output power is of the order of 1 mW and the oscillation is almost always bistable. Phase locking and huge phase-sensitive noise are observed on this oscillating beam.

PACS numbers: 42.65.Ma, 42.50.Dv, 42.55.Bi, 42.65.Pc

There is presently a very large interest in the study of nearly degenerate four-wave mixing. This interest is stimulated by applications in optical phase conjugation[1] and by the generation of squeezed states of light.[2-6] The study of self-oscillation of a cavity when a phase-conjugate medium is used as an amplifier[7] has been a subject of particular interest. Most of the studies done with atomic vapors use the phase-conjugate medium as an amplifying mirror.[8] Here, we present the characteristics of the beam generated when the atomic vapor is used as a parametric amplifier inside a real cavity. Such an oscillator has an unusually low threshold condition, it is almost always bistable, and it exhibits a strong phase locking. These features are very different from those observed with an atomic-vapor amplifying mirror,[8] and also from those obtained with photorefractive materials.[9]

The experimental setup is shown in Fig. 1. We use a 5-cm quartz cell with windows at Brewster angles. The temperature of the cell is 145 °C (the absorption of a weak probe beam at the line center is 40%; most of the experiments presented below are performed in a range of frequency where the absorption is less than 20%). The light source is a homemade cw dye laser pumped by an Ar$^+$-ion laser which delivers about 300 mW at 5890 Å. The incident beam is focused inside the sodium cell and reflected back on itself by a curved mirror M_3. Two mirrors M_1 and M_2 (radius of curvature 30 cm) are set one on each side of the sodium cell. The distance between M_1 and M_2 is $L = 56$ cm. The transmissions T_1 and T_2 of mirrors M_1 and M_2 are 0.5% and 6%. Self-oscillation of this cavity is observed when the frequency detuning from the center of the D_2 resonance is smaller than 3 GHz. Self-oscillation is observed both on the self-focusing and on the self-defocusing side of the resonance. It must be emphasized that in this range of frequency, the phase-conjugate reflectivity R_c is of the order of 1% or less in our experimental conditions.[10] R_c is smaller than the transmission losses (T_1+T_2) which are equal to 6.5%. In fact, the low threshold condition $[R_c > (T_1+T_2)^2/16]$ is connected with the amplification process which comes from a pair emission of photons (Fig. 2).[11,12] For such an amplifying medium, the standing wave adjusts its phase to maximize the energy extracted from the pump beams. The amplification is then much larger than for a single traveling wave.

The maximum output that we have observed is 3 mW,

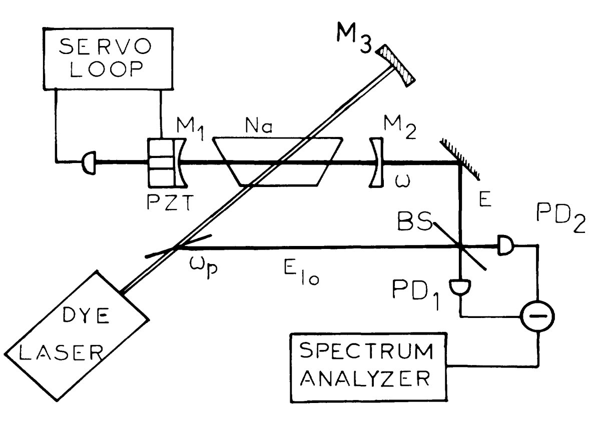

FIG. 1. Experimental setup.

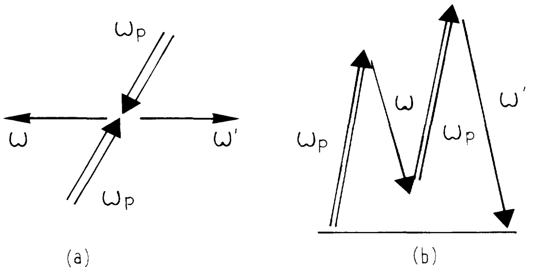

FIG. 2. Principle of the gain mechanism. An atom absorbs two pump photons of frequency ω_p and generates two photons of frequencies ω and ω'. (a) Because of momentum conservation, the two photons are emitted in opposite directions. (b) Because of energy conservation, $\omega+\omega'$ is equal to $2\omega_p$. We have observed both degenerate oscillation $(\omega=\omega'=\omega_p)$ and nondegenerate oscillation $(\omega\neq\omega')$.

which corresponds to 50 mW inside the cavity. Since the waist of the oscillating beam is narrower than the waist of the pump beam by a factor of the order of 2, we see that the power density at the center of the oscillating beam is almost identical to the power density of the pump beam.

The mirror M_1 is mounted on a piezoceramic transducer. In a first set of experiments, the length of the cavity is changed by the application of a voltage on the piezoceramic transducer. We show in Fig. 3(a) the variation of the output intensity I versus L for increasing L. The curve $I=f(L)$ obtained when L decreases is shown in Fig. 3(b). The two curves of Fig. 3 have been obtained in the same experimental conditions; the only difference being the direction of sweep. We clearly observe in Fig. 3 that I_{out} can take two different values when L is limited between L_1 and L_2. This bistable behavior is observed over almost the whole frequency range of oscillation.

The fact that self-oscillation is almost always bistable can be simply understood. The term that creates the phase-conjugate wave appears at the same order of nonlinearity as the self-modification of the refractive index. The two terms are thus clearly connected and must both be included in the theoretical analysis.[13] The intensity of the oscillating beam depends on the phase $(\Phi_0+\Phi_{\text{NL}})$ of the light after one round trip, and Φ_{NL}, which is proportional to the nonlinear refractive index, depends on the intensity inside the cavity.[14] This is the classical scheme for dispersive optical bistability.[15] Indeed, we have checked that the bistability is of dispersive nature by verifying that the asymmetry of the peaks of Fig. 3 is reversed when the sign of the frequency detuning is changed.[16]

In a second set of experiments, the intensity of the oscillating beam is stabilized by the output through the mirror M_1. A servo loop is used which makes it possible to act on the length of the cavity and to maintain the output intensity at a given value. By changing the reference level, we can thus continuously change the output intensity. With this setup, we have looked at the interference pattern between the pump and the oscillating beam and observed highly contrasting fringes (Fig. 4). The position of the fringes does not change for a time of the order of 1 min. For longer time, the modification of the interference pattern can be due to thermal variations of the optical paths followed by the two beams. This experiment shows that the frequency ω of the oscillating beam coincides with the frequency ω_p of the pump beam with a precision better than 10^{-2} Hz. It must be emphasized that this result does not depend on the length L of the cavity. When L varies, the output intensity is modified but the interference fringes are always observed. The observation of this very stable interference pattern can also be interpreted as a phase locking of the oscillating beam on the pump beam. This phase locking comes from the fact that the gain mechanism involved in degenerate four-wave mixing depends on the phase difference between the pump beam and the oscillating beam.[13]

We have done several complementary experiments using a spectrum analyzer and a 5-GHz free-spectral-range Fabry-Perot interferometer to study the frequency spectrum of the oscillating beam. Apart from the emission of $\omega=\omega_p$, we have observed two small sidebands at $\omega_p \pm 270$ MHz (270 MHz is the free spectral range $c/2L$ of our cavity).[17] The maximum intensity of these

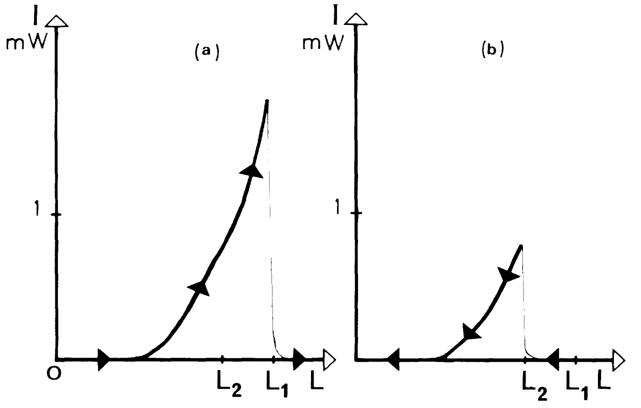

FIG. 3. Intensity I of the oscillating field vs the length L of the cavity (a) for increasing values of L and (b) for decreasing values of L. When L is limited between L_1 and L_2, the output intensity takes different values dependent upon the direction of the sweep.

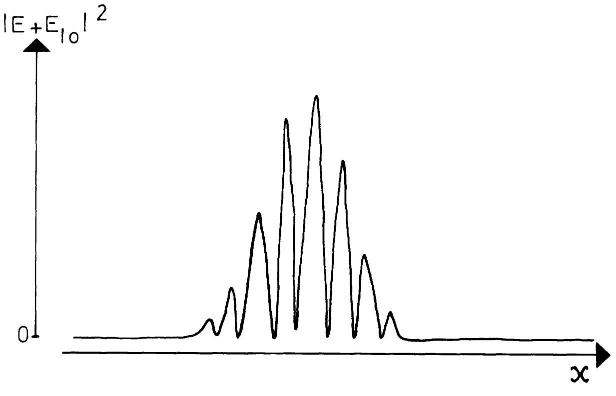

FIG. 4. Interference between the oscillating beam E and the local oscillator E_{lo} observed on an array of photodiodes. The experiment is done with two beams of equal radius and equal maximum intensity. A small angle is made between the two directions of propagation. The intensity $|E+E_{\text{lo}}|^2$ is measured as a function of the distance x on an axis orthogonal to the bisectrix of the two directions of propagation. The contrast of the fringes $(I_{\max}-I_{\min})/(I_{\max}+I_{\min})$ is of the order of 0.95. This interference pattern remains almost unchanged for a time of the order of 1 min.

sidebands is 10^{-2} μW. These sidebands correspond to a nondegenerate four-wave mixing process with simultaneous emission of two photons whose frequencies are $\omega_p + c/2L$ and $\omega_p - c/2L$ (see Fig. 2).

We have finally studied the noise spectrum of such an oscillator. We use a balanced homodyne detection[18] with a beam splitter for which $R=T=0.5$ (and $|R-T| < 10^{-2}$) and two photodiodes PD_1 and PD_2 of quantum efficiencies η_1 and η_2 (we have $\eta_1=\eta_2=0.7$ and $|\eta_1-\eta_2| < 10^{-2}$). In the absence of the oscillating beam, we have checked that the subtraction of the classical noise of the local oscillator is of the order of 30 dB for frequencies smaller than 2 MHz. In the presence of the oscillating beam, the difference between the signals of the two photodiodes is proportional to $I_{lo} I \cos(\Phi - \theta)$, where I_{lo} and I are the intensities of the local oscillator and of the oscillating beam (experimentally $I_{lo}=3$ mW and I is kept between 0.05 and 0.4 mW). Φ is the phase of the oscillating beam and θ includes the contribution of the local oscillator and the difference between the optical paths followed by the two beams. Using a servocontrol mechanism, we keep the mean value of $\Phi - \theta$ constant and record the noise spectrum on a spectrum analyzer. The noise power varies with $\Phi - \theta$. If we plot the noise power versus $\Phi - \theta$ for given values of the frequency of analysis f and of the output intensity I, we obtain a curve which looks like an ellipse.[19] It can be noticed that the ellipse rotates when I varies because of the nonlinear dispersion in sodium. We have shown in Fig. 5 the variation of Δa_2 (minor axis) and Δa_1 (major axis) versus the output intensity for $f=200$ kHz. We see that near threshold, the noise power is 250 times larger on one quadrature than on the other. In fact, Δa_2 can be associated with phase fluctuations and Δa_1 with amplitude fluctuations. The experimental result can be considered as a consequence of the strict determination of the phase at threshold. Just above threshold, oscillation is sustained if the phase fluctuations are very small, and a small phase fluctuation induces a large amplitude fluctuation. On the other hand, well above threshold, amplitude fluctuations are flattened and the condition on the phase is less severe. It can also be noticed that in our experiment, the smallest value of Δa_2 is still 3 times larger than the vacuum fluctuation noise. This is not surprising since the classical noise in dye lasers is known to be important in the range of frequency considered here ($f < 2$ MHz).

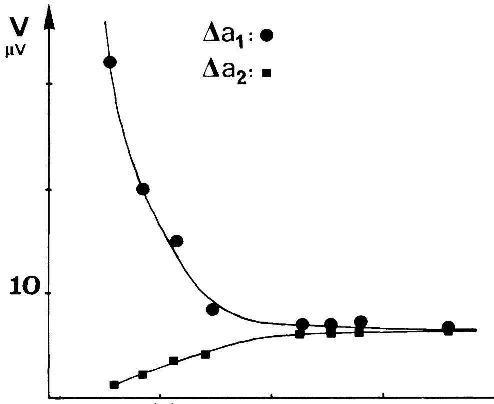

FIG. 5. Homodyne rms noise voltage vs the output intensity I for $f=200$ kHz.

In conclusion, we have reported here the properties of an atomic-vapor parametric oscillator. The present experiment could have several extensions. For example, the possibility of observing squeezed states of light above threshold remains an open question. In this context, the theories[20] were generally developed for a solid-state parametric oscillator and so do not include the nonlinear dispersion whose importance for atomic vapors has been shown here. The characteristics of the oscillation in a ring cavity may also have interesting properties both for the generation of states of light with equal numbers of photons[21] and for applications to ring-laser gyroscopes.

Laboratoire de Spectroscopie Hertzienne de l'Ecole Normale Supérieure is a laboratoire associé au Centre National de la Recherche Scientifique.

---

[1] R. W. Hellwarth, J. Opt. Soc. Am. **67**, 1 (1977); A. Yariv and D. M. Peper, Opt. Lett. **1**, 16 (1977); see also *Optical Phase Conjugation*, edited by R. Fisher (Academic, New York, 1983).

[2] H. P. Yuen and J. H. Shapiro, Opt. Lett. **4**, 334 (1979).

[3] D. F. Walls, Nature (London) **306**, 141 (1983).

[4] R. E. Slusher, L. W. Holberg, B. Yurke, J. C. Mertz, and J. F. Valley, Phys. Rev. Lett. **55**, 2409 (1985); R. E. Slusher and B. Yurke, in *Frontiers in Quantum Optics,* edited by S. Sarkar and E. R. Pike (Hilger, London, 1986).

[5] R. M. Shelby, M. D. Levenson S. H. Perlmutter, R. G. De Voe, and D. F. Walls, Phys. Rev. Lett. **57**, 691 (1986); Ling-Au Wu, H. J. Kimble, J. L. Hall, and Huifa Wu, Phys. Rev. Lett. **57**, 2520 (1986).

[6] M. W. Maeda, P. Kumar, and J. H. Shapiro, Phys. Rev. A **32**, 3803 (1985).

[7] D. M. Bloom, P. F. Liao, and N. P. Economou, Opt. Lett. **2**, 58 (1978).

[8] R. C. Lind and D. G. Steel, Opt. Lett. **6**, 554 (1981); B. Kleinmann, F. Trehin, M. Pinard, and G. Grynberg, J. Opt. Soc. Am. B **2**, 704 (1985); E. Le Bihan, M. Pinard, and G. Grynberg, Opt. Lett. **11**, 159 (1986); J. R. Leite, P. Simoneau, D. Bloch, S. Leboiteux, and M. Ducloy, Europhys. Lett. **2**, 749 (1986).

[9] J. O. White, M. Cronin-Colomb, B. Fisher, and A. Yariv, Appl. Phys. Lett. **40**, 450 (1982); A. Yariv and Sze-Keung Kwong, Opt. Lett. **10**, 454 (1985); K. R. Mac Donald and J. Feinberg, J. Opt. Soc. Am. **1**, 1213 (1984), and Phys. Rev. Lett. **55**, 821 (1985); H. Rajbenbach and J. P. Huignard, Opt. Lett. **10**, 137 (1985).

[10] M. Pinard, D. Grandclément, and G. Grynberg, Europhys. Lett. **2**, 755 (1986).

[11] The threshold condition for this oscillator has been studied in Ref. 10. The result presented here corresponds to the case of a small gain R_c. In this case, the amplification for the forward-propagating wave and the absorption losses in sodium can be neglected (the absorption losses in the presence of a pump beam are much smaller than the absorption for a probe beam alone because of the saturation effects).

[12] A similar threshold condition is found in the case of a doubly resonant parametric oscillator; see Y. R. Shuen, *The Principles of Nonlinear Optics* (Wiley, New York, 1984), Sect. 9.2.

[13] J. Yao, G. Zhou, and A. E. Siegman, Appl. Phys. B **30**, 11 (1983).

[14] It can be noticed that the behavior presented here is different from the situation discussed by G. P. Agrawal and C. Flytzanis, IEEE J. Quantum Electron. **17**, 374 (1981), or by R. M. Shelby, M. D. Levenson, D. F. Walls, A. Aspect, and G. J. Milburn, Phys. Rev. A **33**, 4008 (1986), where the bistability comes from the fact that the pump-beam intensity is enhanced inside a cavity. This is not the case in our experiment (see Fig. 1). The pump beam is simply reflected by the mirror M_3 and the bistability comes from the large value of the oscillating beam inside the cavity.

[15] H. M. Gibbs, *Optical Bistability: Controlling Light with Light* (Academic, New York, 1985).

[16] E. Giacobino, M. Devaud, F. Biraben, and G. Grynberg, Phys. Rev. Lett. **45**, 434 (1980).

[17] No Raman-type emission at $\omega_p \pm 1.77$ GHz has been found. Such emission has been observed at higher sodium temperature with a cell containing helium by P. Kumar and J. H. Shapiro, Opt. Lett. **10**, 226 (1985).

[18] H. P. Yuen and V. W. S. Chan, Opt. Lett. **4**, 177 (1983); J. H. Shapiro, IEEE J. Quantum Electron. **21**, 237 (1985).

[19] M. D. Levenson, R. M. Shelby, and S. H. Perlmutter, Opt. Lett. **10**, 514 (1985).

[20] M. J. Collett and D. F. Walls, Phys. Rev. A **32**, 2887 (1985).

[21] R. Horowicz, M. Pinard, and S. Reynaud, Opt. Commun. **61**, 142 (1987).