Experimental Observation of the Increase of the Two-Dimensional Critical Temperature in Multilayer Adsorption

S. Ramesh, Q. Zhang, G. Torzo,[a] and J. D. Maynard
Department of Physics, The Pennsylvania State University, University Park, Pennsylvania 16802
(Received 9 November 1983)

Measurements of multilayer adsorption of solid ^{4}He on graphite have been made for 0.965 K $\leq T \leq$ 1.24 K at intervals of $\sim$ 15 mK using fourth sound in He II as a probe. The first observation of the increase of the two-dimensional critical temperature T_{cj} with increasing layer number j is reported. We extrapolate our values of T_{cj} for $j \rightarrow \infty$ and obtain the bulk-roughening transition temperature, confirming a prediction of current theories. The modeling of the acoustics including effects of the solid-liquid interface is also presented.

PACS numbers: 67.70.+n, 67.80.−s, 68.45.−v

In recent years the area of two-dimensional interfacial phenomena has aroused considerable theoretical and experimental interest. Mean-field calculations on the lattice-gas model by de Oliveira and Griffiths[1] predicted the occurrence of an infinite set of first-order transitions corresponding to multilayer adsorption under conditions of complete wetting. As temperature increases the first-order transition of the jth layer is expected to terminate at its own critical point T_{cj}; at higher temperature the adsorbate grows continuously. de Oliveira and Griffiths[1] found that for layers near the substrate T_{cj} was near the two-dimensional Ising critical temperature $T_{c,2D}$, whereas for higher layers T_{cj} monotonically increased toward the three-dimensional lattice-gas critical temperature $T_{c,LG}$. The last effect was considered an incorrect artifact of the mean-field theory, since this theory does not allow for a fluctuation-dominated roughening transition[2] (belonging to the Kosterlitz-Thouless universality class) at a temperature $T_R < T_{c,LG}$. The roughening transition for a bulk system has been observed experimentally.[3] Subsequent calculations by Ebner,[4] Saam,[5] Kim and Landau,[6] Pandit, Schick, and Wortis,[7] and Weeks,[8] using techniques which avoid the shortcomings of the mean-field theory, have produced the expected results represented in Fig. 1, which shows the amount of adsorbed phase θ as a function of pressure P (related to the chemical potential) and temperature T. This equilibrium surface displays the effects predicted by de Oliveira and Griffiths[1] (first-order steps in low-temperature adsorption isotherms, continuous adsorption at high temperature, and critical points in between), but now the critical points for layers far from the substrate approach the bulk roughening temperature T_R. More recently Huse[9] and Nightingale, Saam, and Schick[9] have predicted that T_{cj} approaches T_R as $(\ln j)^{-2}$ for large j. In this paper we report the experimental observation of the increase in T_{cj} from near two-dimensional Ising $T_{c,2D}$ toward bulk roughening T_R for solid ^{4}He adsorbed from the superfluid He II phase onto a graphite substrate. An extrapolation of our results for $j \rightarrow \infty$ yields a temperature in good agreement with that observed[3] for the roughening of the (0001) surface of bulk hcp ^{4}He.

In this experiment fourth sound[10] (a pressure wave involving the flow of only the superfluid component of He II in a porous medium or superleak) is used to probe the liquid-solid ^{4}He interface by

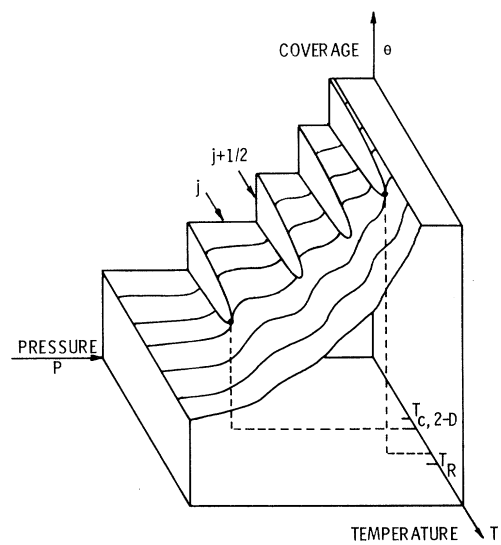

FIG. 1. Equilibrium surface showing coverage θ as a function of temperature T and pressure P. At low T, layers appear in first-order transitions; at high T, coverage increases continuously with P; the dashed lines indicate two of the critical points T_{cj}. Adsorption isotherms have relatively small slopes at integral (j) nominal coverages, and have larger slopes at odd half-integer ($j+\frac{1}{2}$) nominal coverages. Note that $T_{c,2D} \leq T_{cj} \leq T_R$ (see text).

© 1984 The American Physical Society

coupling with the freezing-melting waves[11] unique to this interface. The fourth-sound resonance frequency in an exfoliated graphite (Grafoil) superleak was measured as a function of pressure (7 bars $\lesssim P \lesssim$ 26 bars) at $\sim$ 15 mK temperature intervals (0.965 K $\lesssim T \lesssim$ 1.24 K) with use of a resonator identical to that described previously,[12] but with improved pressure-measurement and data-acquisition techniques.

For convenience in plotting and analysis the measured pressure is converted to a nominal solid thickness with a Franchetti relation $\theta_F = \alpha(P_s - P)^{-1/3}$, where α is a van der Waals force constant ($\sim$ 7 layers $\cdot$ bar$^{1/3}$),[12] and P_s is the bulk solidification pressure. Based on a continuum model, θ_F may coincide with the actual coverage only at high temperatures where the adsorbed solid surface is sufficiently rough; as a mean line through the low-temperature and actual coverage, it seems to locate integral and half-integral coverages fairly well. A typical plot of the resonance frequency versus θ_F is shown in Fig. 2. The periodic minima in the data at $\theta_F = 3.5, 4.5, \ldots, 7.5$ confirm the layer-by-layer, or complete-wetting, mode of growth as previously reported.[12,13] The dashed line in this figure is used in the present data analysis discussed below.

Our analysis of the data requires only a simple qualitative understanding of the coupling between the fourth-sound velocity and the properties of the adsorbed solid, but for the sake of completeness we present here a more quantitative model. The propagation of longitudinal pressure waves in the Grafoil is represented in the inset in Fig. 2 where the graphite platelets are modeled as planes with a mean separation W. In the absence of adsorbed solid a net influx of superfluid $-\rho_1 \partial V_s/\partial x$ (ρ_1 and V_s are the superfluid mass density and particle velocity, respectively) results in a local compressional rise δP which provides the major restoring force for the sound wave. With adsorbed solid present the initial pressure rise causes some liquid mass δm to enter the higher-density solid phase, resulting in a deficit in the liquid density increase, less compression, a smaller restoring force, and a decreased sound speed. The latent heat δQ released by the formation of the solid draws more superfluid component into the local volume; this acts as an additional antirestoring force which further decreases the sound speed. A similar decrease in the restoring force occurs in the other half of the cycle when the solid melts rather than it freezes.

From the geometry of the inset in Fig. 2, the def-

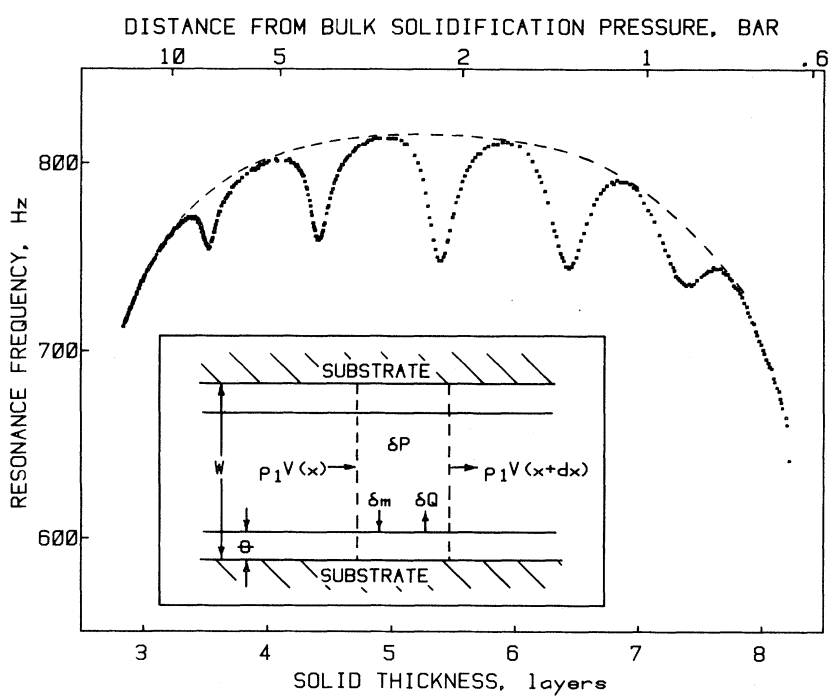

FIG. 2. Typical isotherm of fourth-sound resonance frequency as a function of nominal solid coverage ($T = 1.015$ K). Points are experimental data; dashed line is drawn to aid in quantifying the depth of the minima (see text). Inset: model of fourth-sound propagation between graphite platelets. Symbols are explained in the text.

icit in the superfluid mass density change is given by $\delta\rho_1 = -(2/C_4^2)\Gamma_1\delta P$ where $\Gamma_1 = (\rho_2 - \rho_1) \times C_4^2(\partial\theta/\partial P)/W$ is a dimensionless coupling constant, ρ_2 is the solid mass density, W is expressed in layers, and $\partial\theta/\partial P$ is essentially the slope of the adsorption isotherm. Similarly the heat evolution is given by $\delta Q = (2/T)\Gamma_2\delta P$ with $\Gamma_2 = TL\rho_2(\partial\theta/\partial P)$, where L is the latent heat of solidification per unit mass. By incorporating $\delta\rho_1$ and δQ into the linearized superfluid thermohydrodynamic equations,[10] and assuming a plane-wave solution at frequency ω and wave number k, one obtains the dispersion relation ω/k for the wave propagation. Relaxation due to the finite rate of growth of the adsorbed crystal has not been considered here. However, our earlier experiments[12] show that relaxation effects just become significant for resonance frequencies $\gtrsim 2$ kHz; in our present experiment we have used a low-frequency resonance (~ 700 Hz). For helium $\Gamma_2 \ll \Gamma_1$, and for reasonable values of $\partial\theta/\partial P$, $\Gamma_1 \ll 1$; then one obtains a propagation velocity $C \approx C_4(1-\Gamma_1)$. Thus $C_4 - C \approx C_4\Gamma_1 \propto \partial\theta/\partial P$; i.e., C (and the corresponding resonance frequency) is decreased from C_4 by a quantity directly related to the slope of the adsorption isotherm. This is used in the data analysis to locate T_{cj}.

The procedure for locating T_{cj} is based on the relationship between the behavior of the fourth-sound resonance frequency along an isotherm (as in Fig. 2) and the $\theta(T,P)$ surface (Fig. 1) in the vicinity of a critical point. Near integral layer coverages ($\theta_F = j$), the adsorption isotherms have relatively small, slowly varying slopes so that $C \lesssim C_4$. Near odd half-integral layer coverages ($\theta_F = j + \frac{1}{2}$), the adsorption isotherm varies rapidly, and the maxima in $(\partial\theta/\partial P)$ produce the sharp minima in the resonancy frequency data. For $T > T_{cj}$, the solid adsorption isotherms have a rounded staircase shape; the maximum slope at a step is reflected in the depth of the minimum in the resonance frequency curve (Fig. 2), and the amount of rounding determines the width of the resonance frequency minimum. As T approaches T_{cj} from above, the depth of the minimum increases. With an ideal infinite substrate, the sound speed should drop to zero as the interface susceptibility $\partial\theta/\partial P$ diverges at T_{cj}; below T_{cj}, the depth (and width) of the minima should rapidly decrease. In the ideal system, hysteresis would prevent the vertical steps in the adsorption isotherms from affecting the sound propagation. However, the actual experimental Grafoil system does not provide an ideal infinite substrate; the finite size of the graphite platelets results in coherence-length effects and, perhaps more significantly, effects due to edge nucleation sites. The presence of edge and edge-induced nucleation sites means that a continuous layering mechanism should be superimposed on the ideal system represented by Fig. 1. Such a mechanism would contribute to the rounding of the adsorption isotherms and might preclude the observation of first-order transitions for $T < T_{cj}$; at T_{cj} finite-size effects would lower and round the singularity in $\partial\theta/\partial P$. All of these effects have been observed in theoretical studies.[14] For a (one-dimensional boundary) edge system the roughening temperature is zero and the density of edge nucleation sites increases with no abrupt change with temperature.[15] Thus the effects of the edge mechanism on the solid adsorption isotherms should have a smooth temperature dependence, so that the critical temperatures T_{cj} still correspond to local maxima in $\partial\theta/\partial P$, and hence to local minima in the resonancy frequency date. To find these points we have drawn a smooth line (the dashed curve in Fig. 2) representing C_4 in the absence of layering transitions and have measured the vertical depth $[D_j(T) > 0]$ for each minimum. Then for each j the depth is plotted as a function T, as in Fig. 3; the position of the maxima in these curves yields T_{cj}. It is clear from Fig. 3 that as the nominal coverage

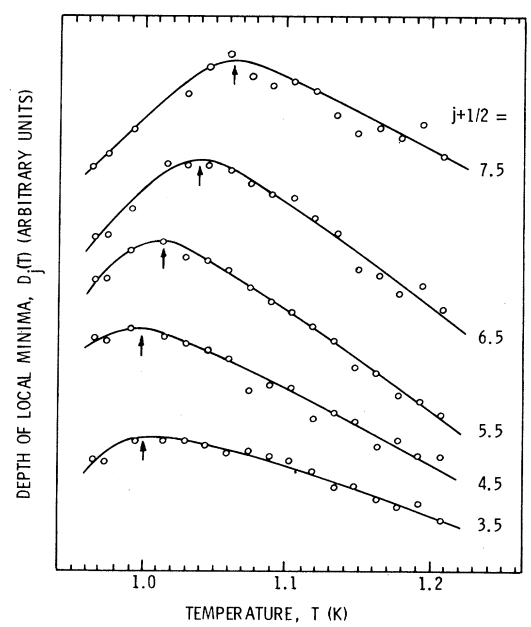

FIG. 3. Depth of local minima D_j for each odd half-integer coverage $(j + \frac{1}{2})$ as functions of temperature. Arrows indicate positions of corresponding critical temperatures. The scatter in the data indicates the estimated error.

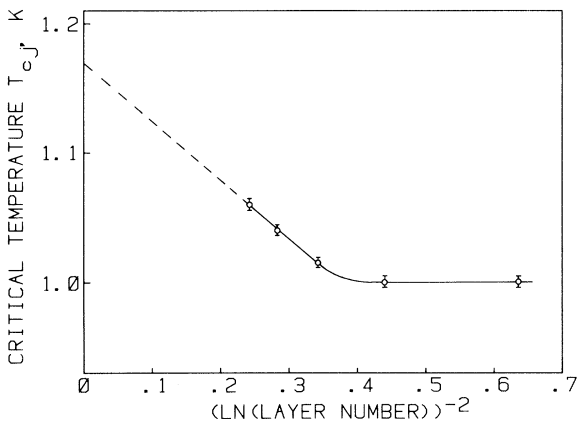

FIG. 4. Plot of the critical temperature T_{cj} of the jth layer as a function of $(\ln n)^{-2}$ (as suggested in Ref. 9, with $n = j + \frac{1}{2}$). Data extrapolate to a roughening temperature $T_R = 1.17 \pm 0.03$ K.

$\theta_F = j + \frac{1}{2}$ increases from 3.5 to 7.5 layers, the critical temperature T_{cj} increases from ~ 1.00 to ~ 1.06 K. The values of T_{cj} indicated by the arrows in Fig. 3 are 1.00, 1.00, 1.015, 1.04, 1.06 ± 0.005 K for $j + \frac{1}{2} = 3.5, 4.5, \ldots, 7.5$, respectively. If these T_{cj} are plotted as a function of $(\ln n)^{-2}$ (as suggested by Huse and by Nightingale, Saam, and Schick,[9] with $n = j + \frac{1}{2}$), as in Fig. 4, then a linear extrapolation for $j \to \infty$ yields $T_{c\infty} = 1.17 \pm 0.03$ K which is in good agreement with the roughening temperature, $T_R = 1.15$–1.17 K,[3] measured for the (0001) surface of bulk hcp ^{4}He. The fractional shift $(T_R - T_{c,2D})/T_R \approx 17\%$ estimated from our data is in reasonable agreement with the theoretical prediction ($\sim 11\%$) by Ebner.[4] Our experimental results for solid ^{4}He on graphite provide good support for current theoretical calculations of multilayer adsorption.

We would like to thank J. D. Weeks, M. Wortis, and D. Landau for helpful discussions. This work was supported by the National Science Foundation through Grant NO. DMR 8304371.

[a]Permanent address: Istituto di Fisica Galileo Galilei, Universitá di Padova, via Marzolo 8, I-35100 Padova, Italy.

[1]M. J. de Oliveira and R. B. Griffiths, Surf. Sci. **71**, 687 (1978).

[2]S. T. Chui and J. D. Weeks, Phys. Rev. B **14**, 4978–4982 (1976); J. D. Weeks, in *Ordering in Strongly Fluctuating Condensed Matter Systems,* edited by T. Riste (Plenum, New York, 1980), p. 293.

[3]P. E. Wolf, S. Balibar, and F. Gallet, Phys. Rev. Lett. **51**, 1366 (1983); S. G. Lipson, Physica (Utrecht) **109&110B**, 1805 (1982).

[4]C. Ebner, Phys. Rev. A **23**, 1925 (1981).

[5]W. F. Saam, Surf. Sci. **125**, 253 (1983).

[6]I. M. Kim and D. P. Landau, Surf. Sci. **110**, 415 (1981).

[7]R. Pandit, M. Schick, and M. Wortis, Phys. Rev. B **26**, 5112 (1982).

[8]J. D. Weeks, Phys. Rev. B **26**, 3998 (1982).

[9]David Huse, Phys. Rev. B, to be published, and private communication; M. P. Nightingale, W. F. Saam, and M. Schick, to be published.

[10]S. J. Putterman, *Superfluid Hydrodynamics* (North-Holland, Amsterdam, 1974).

[11]K. O. Keshishev, A. Ya. Parshin, and A. B. Babkin, Zh. Eksp. Teor. Fiz. **80**, 716 (1981) [Sov. Phys. JETP **53**, 362 (1981)].

[12]J. D. Maynard, G. J. Jelatis, and J. A. Roth, Physica (Utrecht) **107B**, 243–244 (1981); S. Ramesh and J. D. Maynard, Phys. Rev. Lett. **49**, 47 (1982). At present only limited high-frequency relaxation data are available.

[13]K. Carneiro, L. Passell, W. Thomlinson, and H. Taub, Phys. Rev. B **24**, 1170 (1981); Y. Eckstein, J. Landau, S. G. Lipson, and Z. Olami, Phys. Rev. Lett. **45**, 1805 (1980); S. Balibar, B. Castaing, and C. Laroche, J. Phys. (Paris), Lett. **41**, L285 (1980); H. Wiechert, H. J. Lauter, and B. Stuhn, J. Low Temp. Phys. **48**, 209 (1982).

[14]D. P. Landau, Phys. Rev. B **13**, 2997 (1976).

[15]See, for example, H. J. Leamy, G. H. Gilmer, and K. A. Jackson, in *Surface Physics of Materials* (Academic, New York, 1975), Vol. 1, p. 121.