Microparticle driven by parametric and random forces: Theory and experiment

Alexander F. Izmailov,[1] Stephen Arnold,[2] Stephen Holler,[2] and Allan S. Myerson[1]
[1]*School of Chemical & Materials Science, Polytechnic University, Six MetroTech Center, 333 Jay Street, Brooklyn, New York 11201*
[2]*Microparticle Photophysics Laboratory (MP^{3}L), Polytechnic University, Six MetroTech Center, 333 Jay Street, Brooklyn, New York 11201*
(Received 8 March 1995)

The confined motion of a charged microparticle within the Paul Trap (also known as the electrodynamic levitator trap) in an atmosphere near the standard temperature T and pressure P_{atm} is studied both theoretically and experimentally. The suggested theoretical model is based on the Mathieu differential equation with damping term and stochastic source. This equation describes the damped microparticle motion subjected to the combined periodic parametric and random external excitations. To solve the equation in an experimentally investigated regime of extremely strong damping and periodic excitations, the singular perturbation theory (WKB theory) is applied. In order to compare experimental data obtained in the long-time imaging limit with an analytical solution obtained for the autocorrelation function, the last is averaged by employing the Bogoliubov general averaging principle. This comparison is performed in terms of the standard deviation of the microparticle confined stochastic motion. It results almost in the perfect agreement between the analytical result and the data obtained experimentally in an entire region of the investigated experimental parameters. The only theoretical restrictions imposed on the model parameters are $1/\alpha \ll 1$ and $4\beta/\alpha^2 \ll 1$ (where α and β are the dimensionless drag and drive parameters). It is discovered both experimentally and theoretically that there is a minimum equal to $[8kT/(m\omega^2)]^{1/2}$ in the standard deviation of the microparticle confined stochastic motion (m is the microparticle mass and ω is the drive force frequency). The presence of this minimum, which takes place at $\beta \approx 1.518\alpha$, reduces the thermal noise effects, providing unique opportunities for the spectroscopic studies. Comparison with the numerical simulation schemes developed in papers [Arnold, Folan, and Korn, J. Appl. Phys. **74**, 4291 (1993); Blatt *et al.*, Z. Phys. D **4**, 121 (1986); Zerbe, Jung, and Hanggi, Phys. Rev. E **49**, 3626 (1994)] is discussed.

PACS number(s): 02.50.−r

I. INTRODUCTION

The spectroscopy of an electrodynamically confined microparticle is a rapidly growing field. Infrared [1], fluorescence [2,3], Raman [4], and photoemission [5] spectroscopies of such microparticles have been demonstrated and have provided new opportunities in the study of chemical physics of isolated microparticles by spectroscopy [6]. There has been a great deal of attention paid to the dynamical limitations in confinement of individual subatomic charged particles in the Penning traps [7,8] and of atomic ions in the Paul traps [9,10] in vacuum. However, corresponding studies of trapping and levitation of a charged microparticle within the Paul trap [also known as the electromagnetic levitator trap (ELT)] in an atmosphere near standard temperature and pressure (STP) [11,12] have received little attention. Experimental and numerical analyses of stability in trapping were performed in [12,13]. In these papers numerical analysis of the solution stability of the standard Mathieu equation was investigated with respect to the measurable experimental parameters.

Recently the ELT with an atmospheric environment has been successfully applied to the study of nucleation and crystallization [14–17] phenomena in supersaturated electrolyte and nonelectrolyte solutions. The ELT confined microdroplets of supersaturated solutions give a unique opportunity to study homogeneous nucleation and crystallization, since such microdroplets are containerless. This provides good opportunities to verify the main concepts of homogeneous nucleation, as well as to study the metastable state in solutions by achieving the very high solute supersaturation inside of the containerless levitated microdroplets.

In [18] the problem of dynamic confinement of an electrically charged microparticle in the ELT in the atmosphere near the STP received a different level of treatment. The authors suggested taking into account the fact that the trapped microparticle is continuously and randomly "kicked" by atmospheric molecules. This suggestion was implemented by including a white noise term as a source term in the Matheiu differential equation with damping term accounting for the presence of the atmosphere. The Langevin equation introduced in this way describes damped microparticle motion subjected to the combined parametric and random external excitations. Therefore, the understanding of the ELT confined microparticle motion in an atmosphere near the ELT null point was considerably improved and associated with the Brownian parametric oscillator [19]. Furthermore, in [18] the effect of these continuous random collisions (fluctuations) on long-time imaging was investigated experimentally. A comparison between numerical calculations arising from the Langevin equation and imaging led the

 ©1995 The American Physical Society

authors [18] to conclude that the width of imaged points could not be described without including the stochastic force, in accordance with the fluctuation-dissipation theorem [20]. In fact, the numerical calculations using the linear Langevin equation and the experimental measurements were in good agreement [18]. Another attempt to numerically solve the problem was undertaken in [19,21] in which the initial Mathieu equation with a damping term and stochastic source was substituted by the corresponding deterministic Fokker-Planck equation. Recent comparison of the numerically evaluated Fokker-Planck equation [19,21] with the available experimental data (see [18] and this paper) demonstrated good agreement. In [22] an attempt to solve the problem analytically was carried out. In this paper an original ansatz to solve the Mathieu equation with damping term and stochastic source was worked out. The results obtained in the long-time imaging limit demonstrated agreement with experiment only under some specific constraints imposed on the drag and drive parameters.

In spite of the significant interest paid to the dynamics of the ELT confined microparticles during the last ten years, there is still no comprehensive analytical solution to the problem, since the solution presented in [22] has a restricted applicability. In this paper an attempt to build up such a comprehensive analytical solution is presented. The current work can be considered as complementary to our recent analytical results achieved in [22] and consists in an analytical description of the motion of the ELT confined microparticle in an atmosphere near the SPT.

In Sec. II we describe our experimental setup and procedure. In Sec. III we introduce and define an equation describing the confined microparticle stochastic motion. The detailed procedure of its solution by means of the singular perturbation theory (WKB theory) [23,24] is presented in Sec. IV. In Sec. V an analytical expression for the autocorrelation function of the microparticle confined stochastic motion is derived. In Sec. VI, its analysis is given in the long-time imaging limit. In that section we also derive an expression for the standard deviation of the microparticle motion in the long-time imaging limit. We conclude the paper by introducing the concept of the minimum standard deviation of the microparticle confined stochastic motion. The conditions under which this minimum can be achieved are derived. This gives us a knowledge of the regime where the thermal noise effect is considerably reduced, providing new opportunities for the spectroscopic studies of the ELT confined microparticles. A comparison of the analytical results obtained in the paper with various numerical simulation schemes is presented and followed by a summary.

II. EXPERIMENTAL SETUP

The experiments in [18] were performed over a limited range of the drag and drive force parameters range. However, as will be observed both experimentally and theoretically, a curious minimum occurs in the time-averaged positional variance of the microparticle confined stochastic motion as the drive potential on the Paul trap is increased. The original experiments [18] only extended to a region within this minimum. In order to elucidate the character of the physics beyond this point we decided to extend these experiments. In what follows, for the sake of completeness we provide a brief review of the experimental method described in [18].

All experiments were performed at 294.0 K and 1 atm. The experimental setup for microparticle experiments known as an aerosol particle microscope [25] is shown in Fig. 1 [18,22]. Spherical polystyrene electrically charged microparticles with a nominal radius of 3.0 μm were generated from a negatively charged hydrosol droplet [26] using a single particle jet [3], and injected into the ELT. After the parent liquid microdroplet dried, leaving behind the polystyrene microparticle, the chamber surrounding the ELT was sealed. The ELT, which has the characteristic dimension $z_0=4.5$ mm, consists of three electrodes. The top and bottom electrodes are hyperboloids of revolution spaced by $2z_0$, and the center electrode is a torus having a hyperbolic cross section [10]. The periodic drive potential $V_1\cos(\omega t)$ at 60 Hz is applied to the torus relative to the top and bottom electrodes. Therefore, a nearly perfect oscillating quadrupole potential $\Phi(r,z;t)$ is produced,

$$\Phi_{ac}(r,z;t)=V_1\left[\frac{1}{2}-\frac{2z^2-\rho^2}{4z_0^2}\right]\cos(\omega t)\ , \tag{1}$$

where ρ is the cylindrical coordinate ($\rho^2=x^2+y^2$). In addition a constant potential difference V_{dc} is divided equally between the top and center, and center and bottom electrodes in order to produce a static interior potential $\Phi_{dc}(r,z)$. This potential balances gravity at the ELT null point. Two pin electrodes were placed in the torus and electrified in order to cancel any horizontal stray static field at the ELT center [22].

The ELT confined and stochastically moving microparticle was illuminated horizontally, and vertically by a vertically polarized beam from a semiconductor laser (635 μm). Long-time images (50–100 sec) of an individual glare spot [18] were recorded on an integrating charge-coupled device camera through microscopes viewing along the y (horizontal) and z (vertical) axes. The nu-

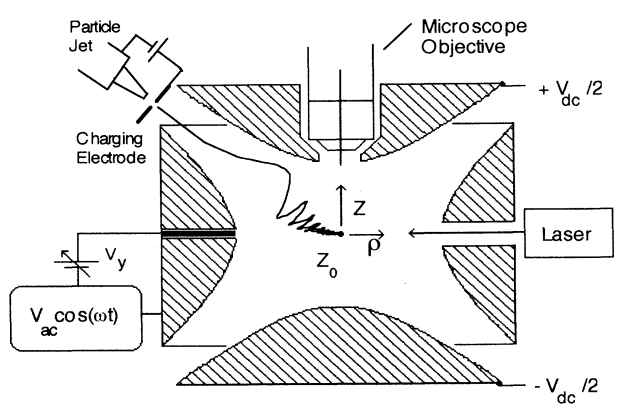

FIG. 1. Experimental setup.

merical aperture of the objective lens was 0.4. The major interest was in measuring the positional variance of these images as a function of the drive potential on the ELT.

III. LANGEVIN EQUATION FOR THE ELT CONFINED ELECTRICALLY CHARGED MICROPARTICLE

A spherical electrically charged microparticle injected into a gaseous atmosphere is pulled to the ELT center by alternating gradient forces, as illustrated in Fig. 1. Therefore, the dynamic equation for the microparticle deterministic motion around the ELT null point is described by Newton's second law,

$$m\frac{d^2\mathbf{r}}{dt^2}+f\frac{d\mathbf{r}}{dt}+q\mathbf{E}_{\rm ac}=0 \ , \tag{2}$$

where m and q are the microparticle mass and electric charge, respectively; $\mathbf{r}$ is the particle radial position vector; and f is the Stokes drag coefficient. In our experiments we are principally interested in viewing the particle motion from the top (xy plane) or the side (e.g., zx plane) directions. Equation (2) easily separates into similar independent equations along the z axis and perpendicular to it. We restrict our interest for the moment to the motion along the z axis for which the following dynamic equation can be derived from expression (1) and Eq. (2),

$$m\frac{d^2z(t)}{dt^2}+f\frac{dz(t)}{dt}-\frac{qV_1}{z_0^2}\cos(\omega t)z(t)=0 \ . \tag{3}$$

This equation has the form of the Mathieu equation with damping. In a region of stability $z(t)$ is asymptotically stable, i.e., damps exponentially with time t [27,28]. This means that the particle, described by Eq. (3), eventually settles to the ELT center and does not move. However, it is easily observable in experiments that the particle does not settle to rest but randomly moves around the ELT null point [18]. This means that Eq. (3) is not complete and should be supplemented with a random source term to account for positional fluctuations in the microparticle motion near the ELT null point. These fluctuations take place due to continuously and randomly occurring collisions between the microparticle and atmospheric molecules. One can come to the same conclusion from the fluctuation-dissipation theorem [20], which states that introduction of a dissipative force (i.e., drag) requires simultaneous introduction of the corresponding random force $R(t)$ in the form of a source term. Thus, Eq. (3) should be rewritten as the following Langevin equation:

$$m\frac{d^2z(t)}{dt^2}+f\frac{dz(t)}{dt}-\frac{qV_1}{z_0^2}\cos(\omega t)z(t)=R(t) \ . \tag{4}$$

This equation defines the time evolution of the confined microparticle vertical position $z=z(t)$ as a random process subjected to the damping and periodic parametric excitations [18]. In this paper we consider the particular case in which the random process $z(t)$ corresponds to the Brownian parametric oscillator, i.e., is the Markov process (the process without an aftereffect). Therefore, the random force $R(t)$ can also be defined as the Markov process. For the sake of simplicity, an additional restriction that the Markov process $R(t)$ is the stationary zero-mean δ-correlated one is imposed. Thus, the process $R(t)$ is the zero-mean white noise that can be completely characterized by the following one-time $P_1(t)$ and the two-time conditional $P_2(t_1,t_2)$ probability densities (i.e, by the fluctuation-dissipation theorem relations):

$$\begin{aligned} P_1(t)&=\langle R(t)\rangle=0 \ , \\ P_2(t_1,t_2)&=\langle R(t_1)R(t_2)\rangle=\sigma^2\delta(t_1-t_2) \ , \end{aligned} \tag{5}$$

where $\langle\ \rangle$ denotes an ensemble average, and $\sigma^2=2k_BTf$ is the white noise variance [20].

Introducing the new variable $x(\tau)=z(\omega t/2)$, Eq. (4) can be rewritten as [18]

$$\frac{d^2x(\tau)}{d\tau^2}+\alpha\frac{dx(\tau)}{d\tau}-\beta\cos(2\tau)x(\tau)=F(\tau) \ , \tag{6}$$

where

$$\alpha=\frac{2f}{m\omega} \ , \quad \beta=\frac{4qV_1}{m(z_0\omega)^2} \ ,$$

$$x(\tau)=z\left[\frac{2\tau}{\omega}\right]=z(t) \ ,$$

$$F(\tau)=\frac{4}{m\omega^2}R\left[\frac{2\tau}{\omega}\right] \ .$$

In Eq. (6) we have introduced the dimensionless drag α and drive β parameters together with the new dimensionless independent variable $\tau=\omega t/2$.

IV. SOLUTION OF THE LANGEVIN EQUATION FOR THE ELT CONFINED ELECTRICALLY CHARGED MICROPARTICLE

It is usually the case that the parameters α and β of Eq. (6) are much greater than 1 [for example, in our experiments $\alpha=45.37\gg1$ and $\beta\subseteq(10,300)\gg1$]. Therefore, Langevin equation (6) is the singularly perturbed linear inhomogeneous differential equation, which we rewrite as follows:

$$\varepsilon^2\frac{d^2x(\tau)}{d\tau^2}+\varepsilon\frac{dx(\tau)}{d\tau}-\beta'\cos(2\tau)x(\tau)=\varepsilon^2F(\tau) \ , \tag{7}$$

where $\varepsilon=1/\alpha$ is the small parameter and $\beta'=\beta/\alpha^2$. The solution of this linear inhomogeneous differential equation can be obtained in terms of the Green function $G(\tau,\tau')$,

$$x(\tau)=\varepsilon^2\int d\tau' G(\tau,\tau')F(\tau') \ . \tag{8}$$

The introduced Green function $G(\tau,\tau')$ satisfies the following linear differential inhomogeneous equation:

$$\varepsilon^2\frac{d^2G(\tau,\tau')}{d\tau^2}+\varepsilon\frac{dG(\tau,\tau')}{d\tau}-\beta'\cos(2\tau)G(\tau,\tau')=\delta(\tau-\tau') \ . \tag{9}$$

The boundary conditions imposed on the function $G(\tau,\tau')$ are $G(\pm\infty,\tau')=0$, i.e, the function $G(\tau,\tau')$ is as-

sumed to be asymptotically stable. In order to satisfy these conditions the Green function $G(\tau,\tau')$ should take the form

$$G(\tau,\tau')=G_+(\tau,\tau')\theta(\tau-\tau')+G_-(\tau,\tau')\theta(\tau'-\tau)\ , \tag{10}$$

where $G_+(\infty,\tau')=0$, $G_-(-\infty,\tau')=0$ and $\theta(\tau'-\tau)$ is the symmetric unit-step function.

We start considering the homogeneous equation for $G_+(\tau,\tau')$,

$$\varepsilon^2\frac{d^2G_+(\tau,\tau')}{d\tau^2}+\varepsilon\frac{dG_+(\tau,\tau')}{d\tau}-\beta'\cos(2\tau)G_+(\tau,\tau')=0\ . \tag{11}$$

In this equation the highest derivative is multiplied by the small parameter ε^2. Therefore, in order to solve this singularly perturbed equation, the singular perturbation theory (the WKB theory) [23,24] should be applied. The WKB solution of Eq. (11) is sought in the form

$$G_+(\tau,\tau')=A_+(\tau')\exp\left[\frac{1}{\varepsilon}\sum_{n=0}^{\infty}\varepsilon^nS_n(\tau)\right]\ . \tag{12}$$

Substitution of this expression into Eq. (11) leads to the following set of equations for the functions $S_n(\tau)$:

$$\left[\frac{dS_0(\tau)}{d\tau}\right]^2+\frac{dS_0(\tau)}{d\tau}=\beta'\cos(2\tau)\ , \tag{13a}$$

$$\frac{d^2S_{2n}(\tau)}{d\tau^2}+2\sum_{m=0}^{n}\frac{dS_m(\tau)}{d\tau}\frac{dS_{2n+1-m}(\tau)}{d\tau}+\frac{dS_{2n+1}(\tau)}{d\tau}=0\ ,n\geq 0\ , \tag{13b}$$

$$\frac{d^2S_{2n-1}(\tau)}{d\tau^2}+\sum_{m=0}^{2n}\frac{dS_m(\tau)}{d\tau}\frac{dS_{2n-m}(\tau)}{d\tau}+\frac{dS_{2n}(\tau)}{d\tau}=0\ ,\quad n\geq 1\ . \tag{13c}$$

Solving the above equations we assume that the parameter $4\beta'$ is small ($\beta'\ll\frac{1}{4}$ or $\beta\ll\alpha^2/4$). This allows one to neglect all the terms proportional to $(\beta')^n$, where $n\geq 2$. Therefore, by carrying out straightforward but cumbersome calculations one can obtain the function $G_+(\tau,\tau')$ in the form

$$G_+(\tau,\tau')=B_+(\tau')\exp\left[-\frac{(\beta')^2}{2\varepsilon}(\tau-\tau')+\frac{\beta'}{2\varepsilon\sqrt{1+4\varepsilon^2}}\sin(2\tau-\Delta)+o[(\beta')^2]\right]\ , \tag{14a}$$

where $\Delta=\tan^{-1}(2\varepsilon)$. Performing the same calculations for the function $G_-(\tau,\tau')$ leads to the following expression:

$$G_-(\tau,\tau')=B_-(\tau')\exp\left[-\frac{(\beta')^2}{2\varepsilon}(\tau'-\tau)+\frac{\beta'}{2\varepsilon\sqrt{1+4\varepsilon^2}}\sin(2\tau-\Delta)+o[(\beta')^2]\right]\ . \tag{14b}$$

It is easy to verify that the functions $G_+(\tau,\tau')$ and $G_-(\tau,\tau')$ satisfy the boundary conditions specified in the definition of expression (10).

The next step is to define the functions $B_+(\tau')$ and $B_-(\tau')$. This can be done by patching. There are two patching conditions. First, it is required that the function $G(\tau,\tau')$ be continuous when $\tau\to\tau'$,

$$\lim_{\rho\to 0}\left[G_+\left[\tau'+\frac{\rho}{2},\tau'\right]-G_-\left[\tau'-\frac{\rho}{2},\tau'\right]\right]=0\ , \tag{15a}$$

where $\tau=\tau'+\rho/2$ for $\tau>\tau'$ and $\tau=\tau'-\rho/2$ for $\tau<\tau'$. This condition implies that $B_+(\tau')=B_-(\tau')=B(\tau')$. Second, integrating Eq. (11) from $\tau=\tau'-\rho/2$ to $\tau=\tau'+\rho/2$ and letting $\rho\to 0$, we obtain the following equation:

$$\lim_{\rho\to 0}\left[\frac{\partial G_+\left[\tau'+\frac{\rho}{2},\tau'\right]}{\partial\rho}-\frac{\partial G_-\left[\tau'-\frac{\rho}{2},\tau'\right]}{\partial\rho}\right]=\frac{1}{\varepsilon^2}\ . \tag{15b}$$

The solution of this equation is

$$B(\tau')=\frac{\sqrt{1+4\varepsilon^2}}{2\varepsilon\beta'\cos(2\tau'-\Delta)}\times\exp\left[\frac{\beta'}{2\varepsilon\sqrt{1+4\varepsilon^2}}\sin(2\tau'-\Delta)+o[(\beta')^2]\right]\ . \tag{16}$$

Thus, by means of expressions (14a), (14b), and (16) the Green functions $G_+(\tau,\tau')$ and $G_-(\tau,\tau')$ are completely determined:

$$G_+(\tau,\tau')=\frac{\sqrt{1+4\varepsilon^2}}{2\varepsilon\beta'\cos(2\tau'-\Delta)}\exp\left[-\frac{(\beta')^2}{2\varepsilon}(\tau-\tau')+\frac{\beta'}{2\varepsilon\sqrt{1+4\varepsilon^2}}[\sin(2\tau-\Delta)-\sin(2\tau'-\Delta)]+o[(\beta')^2]\right]\ , \tag{17a}$$

$$G_-(\tau,\tau')=\frac{\sqrt{1+4\varepsilon^2}}{2\varepsilon\beta'\cos(2\tau'-\Delta)}\exp\left[-\frac{(\beta')^2}{2\varepsilon}(\tau'-\tau)+\frac{\beta'}{2\varepsilon\sqrt{1+4\varepsilon^2}}[\sin(2\tau-\Delta)-\sin(2\tau'-\Delta)]+o[(\beta')^2]\right]\ . \tag{17b}$$

Let us note that

$$G\left[\tau'+\frac{\rho}{2},\tau'\right]\Bigg|_{\tau'=\Delta}=G_+\left[\tau'+\frac{\rho}{2},\tau'\right]\Bigg|_{\tau'=\Delta}$$
$$\equiv -G\left[\tau'+\frac{\rho}{2},\tau'\right]\Bigg|_{\tau'=\pi/2}$$
$$=-G_+\left[\tau'+\frac{\rho}{2},\tau'\right]\Bigg|_{\tau'=\pi/2},$$
$$G\left[\tau'-\frac{\rho}{2},\tau'\right]\Bigg|_{\tau'=\Delta}=G_-\left[\tau'-\frac{\rho}{2},\tau'\right]\Bigg|_{\tau'=\Delta}$$
$$\equiv -G\left[\tau'-\frac{\rho}{2},\tau'\right]\Bigg|_{\tau'=\pi/2}$$
$$=-G_-\left[\tau'-\frac{\rho}{2},\tau'\right]\Bigg|_{\tau'=\pi/2}.$$

This allows us to express displacement (8) as

$$x(2\tau)=\varepsilon^2\int_{2\Delta}^{\pi}d\tau' G(2\tau,\tau')F(\tau') . \tag{18}$$

In the above expressions $F(\tau)$ is the δ-correlated zero-mean white noise,

$$\langle F(\tau)\rangle=0 , \quad \langle F(\tau_1)F(\tau_2)\rangle=\Gamma\delta(\tau_1-\tau_2) , \tag{19}$$

where $\Gamma=8\sigma^2/(m^2\omega^3)$.

V. AUTOCORRELATION FUNCTION OF THE ELT CONFINED ELECTRICALLY CHARGED MICROPARTICLE

The autocorrelation function $W(\tau_1,\tau_2)$ which defines the conditional probability for the Markov process $x(\tau)$, introduced in Sec. II, is given by the expression

$$W(\tau_1,\tau_2)=\langle x(2\tau_1)x(2\tau_2)\rangle . \tag{20}$$

Substituting into this relation expressions for $x(2\tau_1)$ and $x(2\tau_2)$ given by Eq. (18) and utilizing relation (19), it is straightforward to demonstrate that for the case $\tau_1>\tau_2$ there is the following expressions for the function $W(\tau_1,\tau_2)$:

$$W(\tau_1,\tau_2)=\Gamma\varepsilon^4\left[\int_{-2\Delta}^{2\tau_2}d\tau' G_+(2\tau_1,\tau')G_+(2\tau_2,\tau') + \int_{2\tau_2}^{2\tau_1}d\tau' G_+(2\tau_1,\tau')G_-(2\tau_2,\tau') + \int_{2\tau_1}^{\pi}dr' G_-(2\tau_1,\tau')G_-(2\tau_2,\tau')\right] . \tag{21}$$

The following step in determining the function $W(\tau_1,\tau_2)$ requires substitution into relation (21) of expressions (17a) and (17b) found for the Green functions $G_\pm(2\tau_1,\tau')$ and $G_\pm(2\tau_2,\tau')$, respectively. This provides

$$W(\tau_1,\tau_2)=\frac{\Gamma\varepsilon^2[1+4\varepsilon^2]}{(2\beta')^2}\left[\exp\left[-\frac{(\beta')^2}{2\varepsilon}(\tau_1+\tau_2)+\frac{\beta'}{2\varepsilon\sqrt{1+4\varepsilon^2}}[\sin(2\tau_1-\Delta)+\sin(2\tau_2-\Delta)]\right]\right.$$
$$\times\int_{2\Delta}^{2\tau_2}d\tau'\frac{\exp\left[\frac{(\beta')^2}{\varepsilon}\tau'-\frac{\beta'}{\varepsilon\sqrt{1+4\varepsilon^2}}\sin(\tau'-\Delta)\right]}{\cos^2(\tau'-\Delta)}$$
$$+\exp\left[-\frac{(\beta')^2}{2\varepsilon}(\tau_1-\tau_2)+\frac{\beta'}{2\varepsilon\sqrt{1+4\varepsilon^2}}[\sin(2\tau_1-\Delta)+\sin(2\tau_2-\Delta)]\right]$$
$$\times\int_{-2\tau_2}^{2\tau_1}d\tau'\frac{\exp\left[-\frac{\beta'}{\varepsilon\sqrt{1+4\varepsilon^2}}\sin(\tau'-\Delta)\right]}{\cos^2(\tau'-\Delta)}$$
$$+\exp\left[\frac{(\beta')^2}{2\varepsilon}(\tau_1+\tau_2)+\frac{\beta'}{2\varepsilon\sqrt{1+4\varepsilon^2}}[\sin(2\tau_1-\Delta)+\sin(2\tau_2-\Delta)]\right]$$
$$\left.\times\int_{-2\tau_1}^{\pi}d\tau'\frac{\exp\left[-\frac{(\beta')^2}{\varepsilon}\tau'-\frac{\beta'}{\varepsilon\sqrt{1+4\varepsilon^2}}\sin(\tau'-\Delta)\right]}{\cos^2(\tau'-\Delta)}\right] .$$

Now we take into account that integrands in the above expression are products of the slowly varying $\exp[\pm(\beta')^2\tau'/\varepsilon]$ and fast varying $\exp\{\beta'\sin(\tau'-\Delta)/[\varepsilon(1+4\varepsilon^2)^{1/2}]\}$ exponential factors. Therefore, introducing the notations $\tau_1=\tau+\rho/2$ and $\tau_2=\tau-\rho/2$, the expression for the function $W(\tau+\rho/2,\tau-\rho/2)$ can be reduced to the form

$$W\left[\tau+\frac{\rho}{2},\tau-\frac{\rho}{2}\right]=\frac{\Gamma\varepsilon^2[1+4\varepsilon^2]}{(2\beta')^2}\exp\left[-\frac{(\beta')^2}{2\varepsilon}\rho+\frac{\beta'\cos(\rho)}{\varepsilon\sqrt{1+4\varepsilon^2}}\sin(2\tau-\Delta)\right]$$
$$\times\int_{2\Delta}^{\pi}d\tau'\frac{\exp\left[-\frac{\beta'}{\varepsilon\sqrt{1+4\varepsilon^2}}\right]}{\cos^2(\tau'-\Delta)}. \tag{22}$$

In order to carry out integration in this expression we employ the following Fourier decomposition [28]:

$$\exp\left[-\frac{\beta'}{\varepsilon\sqrt{1+4\varepsilon^2}}\sin(\tau'-\Delta)\right]=I_0\left[\frac{\beta'}{\varepsilon\sqrt{1+4\varepsilon^2}}\right]+\sum_{n=1}^{\infty}(-i)^nI_n\left[\frac{\beta'}{\varepsilon\sqrt{1+4\varepsilon^2}}\right][e^{in(\tau'-\Delta)}+(-1)^ne^{-in(\tau'-\Delta)}], \tag{23}$$

where $I_n(\gamma)$ is the modified Bessel function of order n. Taking into account that the ratio $d_n(\gamma)=I_n(\gamma)/I_0(\gamma)$ for $n\geq 1$ can be expanded asymptotically as

$$d_n(\gamma)|_{\gamma\to 0}=\frac{\gamma^n}{2^n n!}\ ,\quad d_n(\gamma)|_{\gamma\to\infty}=e^{-n^2/2\gamma}\ ,$$

it is straightforward to conclude that $0\ll d_n(\gamma)\ll 1$ for $\gamma\subseteq(0,\infty)$. In the investigated range of the experimental parameters $\varepsilon=1/\alpha$ and $\beta'=\beta/\alpha^2$, their combination $\beta'/(\varepsilon\sqrt{1+4\varepsilon^2})\ll 3$. Thus, a good approximation for the Fourier decomposition (23) is constructed by using only its first term. Finally, we obtain the autocorrelation function $W(\tau+\rho/2,\tau-\rho/2)$ in the form

$$W\left[\tau+\frac{\rho}{2},\tau-\frac{\rho}{2}\right]=\frac{\Gamma\varepsilon^3[1+4\varepsilon^2]}{(\beta')^2}e^{-[(\beta')^2/2\varepsilon]\rho}$$
$$\times I_0\left[\frac{\beta'}{\varepsilon\sqrt{1+4\varepsilon^2}}\right]$$
$$\times\exp\left[\frac{\beta'\cos(\rho)}{\varepsilon\sqrt{1+4\varepsilon^2}}\sin(2\tau-\Delta)\right]. \tag{24}$$

VI. COMPARISON WITH THE LONG-TIME IMAGING EXPERIMENT AND NUMERICAL SIMULATIONS

As it has been stated in Sec. II, we are interested in the limiting case corresponding to long-time imaging. In this case the resulting microparticle image is obtained by a continuous recording of its images within a long-time exposure (≈ 100 s) of the camera. The analytical quantity corresponding to the experimentally observed variance $W_{\text{expt}}(0)$ of the microparticle confined stochastic motion in the long-time imaging limit can be obtained by applying the Bogoliubov general averaging principle [22,29]. According to this principle in the long-time ($t=2\pi/\omega$) limit the autocorrelation function $W(\tau+\rho/2,\tau-\rho/2)$ can be approximated uniformly and arbitrary closely by its average $W(\rho)$ over the time interval $[0,\pi]$,

$$W(\rho)=\frac{1}{\pi}\int_0^{\pi}d\tau W\left[\tau+\frac{\rho}{2},\tau-\frac{\rho}{2}\right]. \tag{25}$$

Carrying out calculations prescribed by relation (25) and restoring the initial notations [see relation (6)] we obtain $W(\rho)$ in the form

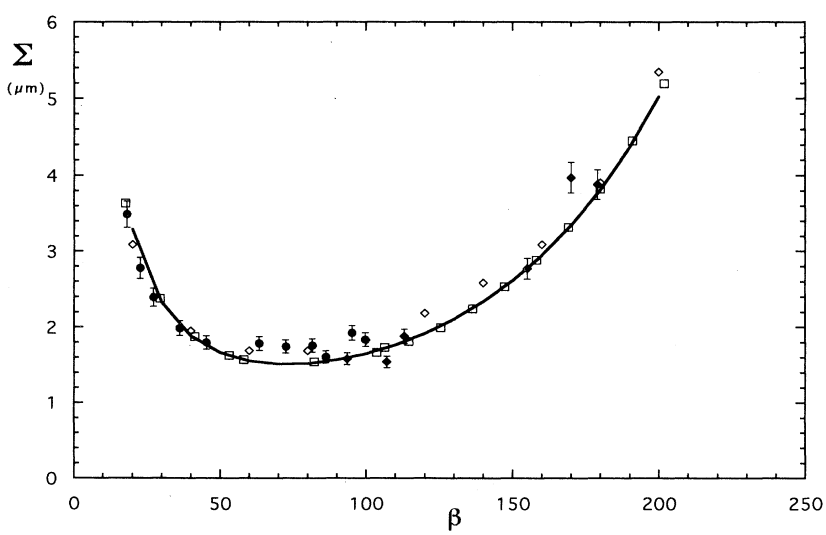

FIG. 2. Comparative plot of the standard deviation of the ELT confined microparticle stochastic motion Σ_{theory} derived analytically (——), Σ_{expt} obtained experimentally (●, viewing along z axis [18]; ♦, viewing along y axis), and $\Sigma_{\text{num}}(L)$ obtained in [18] by numerically simulating the initial Langevin equation (□) and $\Sigma_{\text{num}}(\text{FP})$ obtained by numerical simulation of the Fokker-Planck equation (◇). The comparison has been performed for the drag parameter $\alpha=45.37$ in the N_2 atmosphere near STP. Image recording was along the y axis ($\beta_y=\beta_z/2$).

$$W(\rho)=\frac{\Gamma(\alpha^2+4)}{\alpha\beta^2}e^{-(\beta^2/2\alpha^3)\rho}I_0\left[\frac{\beta\cos(\rho)}{\sqrt{\alpha^2+4}}\right]\times I_0\left[\frac{\beta}{\sqrt{\alpha^2+4}}\right] . \quad (26)$$

Comparison of the standard deviation $\Sigma_{\text{theory}}=\sqrt{W(0)}$ obtained theoretically with the standard deviation $\Sigma_{\text{expt}}=\sqrt{W_{\text{expt}}(0)}$ observed experimentally is given in Fig. 2, which demonstrates a remarkable agreement between the theory developed in this paper and the experimental data obtained in a wide region (10–300) of the parameter β (drive force amplitude). As it has been noticed in Sec. I, there is a minimum in the positional variance of the microparticle confined stochastic motion (see Fig. 2) that has been clearly observed in our experiments. The existence of this minimum follows also from the analytical result (26) obtained in this paper. An investigation of the function $W(0)$ minimum with respect to the drive parameter β shows that this minimum $W_{\min}(0)$ takes place if

$$I_1(\gamma)=\gamma\ , \quad \text{with } \gamma=\frac{\beta_{\min}}{\sqrt{\alpha^2+4}} . \quad (27)$$

This provides expressions for the function $W_{\min}(0)$ and the parameter $\beta_{\min}$ in the form

$$W_{\min}(0)=\frac{\Gamma}{\alpha}=\frac{8kT}{m\omega^2},\quad \beta_{\min}=1.518\sqrt{\alpha^2+4} .$$

It is noteworthy that $W_{\min}(0)$ is dependent only of the microparticle mass m and the drive frequency ω. Numerical evaluation of $W_{\min}(0)$ and $\beta_{\min}$ for the drag parameter $\alpha=45.37$ leads to $W_{\min}(0)=1.38$ μm and $\beta_{\min}=68.94$. These theoretical predictions are in the very good agreement with the minimum of positional variance observed experimentally (see Fig. 2). The existence of such a minimum in the positional variance of the microparticle confined stochastic motion is of considerable importance since one can significantly reduce the thermal noise effect on the positional uncertainty of the microparticle motion. This provides new opportunities for the spectroscopic studies of the ELT levitated microparticles in an atmosphere.

In [18] an original numerical simulation scheme for Eq. (6) was developed. In this scheme it was suggested to substitute Eq. (9) for the Green function $G(\tau,\tau')$ by the following one:

$$\varepsilon^2\frac{d^2h_\phi(\tau,0)}{d\tau^2}+\varepsilon\frac{dh_\phi(\tau,0)}{d\tau}-\beta'\cos(2\tau+\phi)h_\phi(\tau,0)=\delta(\tau) . \quad (28)$$

In this equation the quantity ϕ is a random phase. The introduction of this phase is physically justified, since it accounts for the randomly occurring collisions between the microparticle and atmospheric molecules. It is easy to demonstrate that substituting the independent variable τ by $\tau-\phi/2$ one can obtain Eq. (28) in the form (9) with the variable $\tau'=\phi/2$ fixed. This observation is important, since it allows one to identify the Green function $h_\phi(\tau,0)$ introduced by Eq. (28) with the function $G(\tau,\phi/2)$ obtained in this paper [see expressions (10), (14a), and (14b)]. Therefore integration over the independent variable τ' in Eq. (21) for the autocorrelation function $W(\tau_1,\tau_2)$, together with accounting for the continuously and randomly occurring collisions between the microparticle and atmospheric molecules, can be interpreted as averaging over the random phase ϕ. However, since the separately taken Eq. (28) does not imply the presence of the stationary stochastic source in the right hand of the underlying Eq. (6), it was assumed in [18] that the Green function $h_\phi(\tau,0)$ is τ-shift invariant in the long-time limit, which was associated in paper [18] with the establishment of thermodynamic equilibrium. Having this assumption in mind it is straightforward to demonstrate that in terms of the Green function $h_\phi(\tau,0)$ the variance $W_{\text{num}}(0)$ of the microparticle confined stochastic motion can be represented in the form [18]

$$W_{\text{num}}(0)=\frac{8\sigma^2}{m^2\omega^3}\left\langle\int_0^\infty d\tau\, h_\phi^2(\tau,0)\right\rangle_\phi . \quad (29)$$

In this expression $\langle\ \rangle_\phi$ denotes averaging over the random phase ϕ. Numerical analysis of the standard deviation $\Sigma_{\text{num}}(L)=\sqrt{W_{\text{num}}(0)}$ given by expression (29) demonstrates remarkable agreement between the prescription given by Eq. (29) and the analytical result (25) obtained in this paper (see Fig. 2). Such an agreement provides justification to the very strong and useful statement, "*In the linear problems with stochastic source and parameters independent and dependent periodically on time, the averaging over equilibrium ensemble in the long-time limit is equivalent to the averaging over random phase shift.*" This very interesting statement looks like an ergodic theorem [20], in which time is substituted by a random phase shift. Its more general justification requires further investigations of the linear differential equations with periodic parameters and stochastic source.

In [19,21] the initial second-order linear stochastic differential equation (6) was substituted by the corresponding nonstationary deterministic Fokker-Planck equation for the conditional probability density. The system of linear differential equations presented in these papers for the covariance matrix components was numerically analyzed. We performed the same numerical analysis of this system for the drag and drive parameters corresponding to our experiments. In what follows numerical simulation of the Fokker-Planck equation for the covariance matrix also gives good correspondence with experiment (see Fig. 2) in terms of the simulated standard deviation Σ_{num} (FP). However, our recent measurements of the conditional probability density $P_2[x(\tau_1),x(t_2)]$ for the microparticle to be located at $x(t_1)$ at the time instant t_1 if at the time instant t_2 ($t_2<t_1$) it was located at $x(t_2)$ in the long-time imaging limit demonstrated that the function $P_2[x(t_1),x(t_2)]$ was not Gaussian in the region where $\beta\geq 300$. This experimental observation allows us to conclude that in the region of experimental parameters where $\beta\geq 250$ the Fokker-Planck formalism is not applicable, since it assumes that Gaussian form for

the function is an important conclusion $P_2[x(t_1),x(t_2)]$. In this region an alternative singular perturbation approach, similar to the one developed in this paper, with respect to the large dimensionless parameter β should be employed.

ACKNOWLEDGMENTS

The authors gratefully acknowledge the support of the National Science Foundation (NSF Grant No. ATM-89-05871 and NASA (NASA Grant No. GNA8-1060).

[1] S. Arnold, M. Neuman, and A. B. Pluchino, Opt. Lett. **9**, 4 (1984).
[2] L. M. Folan, S. Arnold, and S. D. Druger, Chem. Phys. Lett. **118**, 322 (1985).
[3] S. Arnold and L. M. Folan, Rev. Sci. Instrum. **57**, 2250 (1986).
[4] R. E. Preston, T. R. Lettieri, and H. G. Semerjian, Langmuir **1**, 365 (1985).
[5] S. Arnold and N. Hessel, Rev. Sci. Instrum. **56**, 2066 (1985).
[6] S. Arnold, in *Optical Effects Associated with Small Particles,* edited by P. W. Barber and R. K. Chang (World Scientific, Singapore, 1988), pp. 65–137.
[7] D. Wineland, P. Ekstrom, and H. G. Dehmelt, Phys. Rev. Lett. **31**, 1297 (1973).
[8] L. S. Brown and G. Gabrielese, Rev. Mod. Phys. **58**, 233 (1986).
[9] H. G. Dehmelt, in *Advances in Atomic and Molecular Physics* (Academic, New York, 1967), Vol. 3.
[10] W. Paul, Rev. Mod. Phys. **62**, 531 (1990).
[11] H. Winter and H. W. Ortjohann, Am. J. Phys. **59**, 807 (1991).
[12] R. F. Weurker, H. Shelton, and R. V. Langmuir, J. Appl. Phys. **30**, 349 (1959).
[13] E. J. Davis, P. Ravindran, and A. K. Ray, Adv. Colloid Interface Sci. **15**, 1 (1981).
[14] A. S. Myerson, H. S. Na, A. F. Izmailov, and S. Arnold (unpublished).
[15] H. S. Na, S. Arnold, and A. S. Myerson, J. Cryst. Growth **139**, 104 (1994).
[16] H. S. Na, Ph.d dissertation, Polytechnic University, 1994 (unpublished).
[17] A. F. Izmailov, A. S. Myerson, and N. S. Na (unpublished).
[18] S. Arnold, L. M. Folan, and A. Korn, J. Appl. Phys. **74**, 4291 (1993).
[19] R. Blatt, P. Zoller, G. Holzmuller, and I. Siemers, Z. Phys. D **4**, 121 (1986).
[20] L. D. Landau and E. M. Lifshitz, *Statistical Physics,* Course of Theoretical Physics, Vol. 5 (Pergamon Press, London, 1986).
[21] C. Zerbe, P. Jung, and P. Hanggi, Phys. Rev. E **49**, 3626 (1994).
[22] A. F. Izmailov, S. Arnold, and A. S. Myerson, Phys. Rev. E **50**, 702 (1994).
[23] A. Nayfen, *Perturbation Methods,* Pure and Applied Mathematics. A Wile-Interscience Series of Texts, Monographs and Tracts (Wiley, New York, 1973).
[24] L. Sirovich, *Techniques of Asymptotic Analysis,* Applied Mathematical Sciences, Vol. 2 (Springer-Verlag, New York, 1971).
[25] S. Arnold, S. Holler, J. H. Li, A. Serpenguzel, W. F. Auffermann, and S. C. Hill, Opt. Lett. **20**, 773 (1995).
[26] S. Arnold, A. Ghaemi, and K. A. Fuller, Opt. Lett. **19**, 156 (1994).
[27] S. Arnold, Rev. Sci. Instrum. **62**, 3025 (1991).
[28] G. Blanch, in *Handbook of Mathematical Functions,* edited by M. Abramowitz and I. A. Stegun, Natl. Bur. Stand. (U.S.) Applied Mathematics Series No. 55 (U.S. GPO, Washington, DC, 1964).
[29] N. N. Bogoliubov and Y. A. Miropolsky, *Asymptotic Methods in the Theory of Non-Linear Oscillations* (Gordon and Breach, New York, 1961).