Near-integrability and confinement for high-energy hadron-hadron collisions

Peter Orland*

The Niels Bohr Institute, The Niels Bohr International Academy, Blegdamsvej 17, DK-2100, Copenhagen Ø, Denmark
The Graduate School and University Center, The City University of New York, 365 Fifth Avenue, New York, New York 10016, USA
Baruch College, The City University of New York, 17 Lexington Avenue, New York, New York 10010, USA

(Received 2 January 2008; published 10 March 2008)

We investigate an effective Hamiltonian for QCD at large s, in which longitudinal gauge degrees of freedom are suppressed, but not eliminated. In an axial gauge the effective field theory is a set of coupled $(1+1)$-dimensional principal-chiral models, which are completely integrable. The confinement problem is solvable in this context, and we find the longitudinal and transverse string tensions with techniques already used for a similar Hamiltonian in $(2+1)$ dimensions. We find some *a posteriori* justification for the effective Hamiltonian as an eikonal approximation. Hadrons in this approximation consist of partons, which are quarks and solitonlike excitations of the sigma models. Diffractive hadron-hadron scattering appears primarily due to exchange of longitudinal flux between partons.

DOI: 10.1103/PhysRevD.77.056004 PACS numbers: 11.10.Kk, 11.15.Ha, 11.15.Tk, 11.80.Fv

I. INTRODUCTION

In the last decade and a half, effective gauge-theory descriptions for QCD at large center-of-mass energy squared s has been an active area of research [1–8]. The approximation of Ref. [6] was to eliminate some gauge-theory degrees of freedom by a longitudinal rescaling. In this paper we carefully examine the consequences of this rescaling: $x^{0,3} \to \lambda x^{0,3}$, $x^{\perp} \to x^{\perp}$, $A_{0,3} \to \lambda^{-1} A_{0,3}$, $A_{\perp} \to A_{\perp}$, where $A_\mu = A^a_\mu t_a$, $a = 1, \ldots, N^2 - 1$, denotes the components of the SU(N) Yang-Mills field and the transverse indices 1, 2 are sometimes collectively denoted by $\perp$. We normalize $\mathrm{Tr} t_a t_b = \delta_{ab}$ and define $\mathrm{i} f^c_{ab} t_c = [t_a, t_b]$. The center-of-mass energy squared changes as $s \to \lambda^{-2} s$ [6]. Since we wish to consider high energies, we take $\lambda \ll 1$.

If the scale factor λ is small, but not zero, the resulting Hamiltonian has one extremely small coupling and one extremely large coupling. The rescaled action is

$$S = \frac{1}{2g_0^2} \int d^4x \, \mathrm{Tr}\left(\lambda^{-2} F_{03}^2 + \sum_{j=1}^{2} F_{0j}^2 - \sum_{j=1}^{2} F_{j3}^2 - \lambda^2 F_{12}^2\right), \tag{1.1}$$

where $F_{\mu\nu} = \partial_\mu A_\nu - \partial_\nu A_\mu - \mathrm{i}[A_\mu, A_\nu]$. The Hamiltonian in $A_0 = 0$ gauge is therefore

$$H = \int d^3x \left(\frac{g_0^2}{2} \mathscr{E}_\perp^2 + \frac{1}{2g_0^2} \mathscr{B}_\perp^2 + \frac{(g_0')^2}{2} \mathscr{E}_3^2 + \frac{1}{2(g_0'')^2} \mathscr{B}_3^2\right), \tag{1.2}$$

where $g_0' = \lambda g_0$, $g_0'' = \lambda^{-1} g_0$ (so that $g_0' g_0'' = g_0^2$), the electric and magnetic fields are $\mathscr{E}_i = -\mathrm{i}\delta/\delta A_i$ and $\mathscr{B}_i = \epsilon^{ijk}(\partial_j A_k + A_j \times A_k)$, respectively, and $(A_j \times A_k)^a = f^a_{bc} A^b_j A^c_k$. Physical states Ψ must satisfy Gauss's law

$$(\partial_\perp \cdot \mathscr{E}_\perp + \partial_3 \mathscr{E}_3 - \rho)\Psi = 0, \tag{1.3}$$

where ρ is the quark color-charge density. As of this writing, we are not certain that this rescaled theory is definitely describing QCD, but think it may be a useful phenomenological approach to small-x, large-s scattering.

The Hamiltonian (1.2) and the constraint (1.3) will be regularized on a spatial lattice [9], keeping time continuous. Afterwards, x^3 will also be made continuous, leaving only the transverse coordinates discrete. We take an axial gauge condition, breaking the precedent of considering large-s scattering in the light-cone gauge. We do this because, as we show later, (1.2) is similar to the anisotropic $(2+1)$-dimensional Yang-Mills theory in this gauge [10–14]. If further experience persuades us to use a light-cone lattice [15] instead, so be it. A light-cone-lattice approach in this spirit was discussed in Ref. [16]. This was the starting point of an argument justifying the rescaling used in (1.1) by an anisotropic renormalization group [17]. Similar arguments were presented for the $(2+1)$-dimensional case [13,14] without knowledge of Ref. [17]. We should mention that a lattice gauge theory with different transverse and longitudinal couplings has also been studied in Ref. [18].

The analogous rescaling in $(2+1)$ dimensions gives the Hamiltonian, in $A_0 = 0$ gauge,[1]

$$H = \int d^2x \left(\frac{g_0^2}{2} \mathscr{E}_1^2 + \frac{1}{2g_0^2} \mathscr{B}^2 + \frac{(g_0')^2}{2} \mathscr{E}_2^2\right), \tag{1.4}$$

where $g_0' = \lambda g_0$, and the electric and magnetic fields are $\mathscr{E}_i = -\mathrm{i}\delta/\delta A_i$ and $\mathscr{B} = (\epsilon^{jk}\partial_j A_k + A_j \times A_j)$, respectively. Gauss's law is

$$(\partial_1 \cdot \mathscr{E}_1 + \partial_2 \mathscr{E}_2 - \rho)\Psi = 0. \tag{1.5}$$

*giantswing@gursey.baruch.cuny.edu

[1]We note that the coordinate indices 1 and 2 are reversed in Refs. [10–14].

 © 2008 The American Physical Society

Upon regularization, confinement of quarks can be readily demonstrated. Thus the hadronization problem is essentially solved. This suggests that the elastic part of the forward amplitude and the soft Pomeron can eventually be understood using our methods.

It has been noted before that the $\lambda \to 0$ limit of QCD is equivalent to a set of principal-chiral $\mathrm{SU}(N) \times \mathrm{SU}(N)$ sigma models [6,16]. Such a sigma model has the Lagrangian $\mathscr{L} = 1/(2g_0^2)\eta^{\mu\nu}\,\mathrm{Tr}\partial_\mu U^\dagger \partial_\nu U$, where $U \in \mathrm{SU}(N)$ and $\mu = 0, 3$. This field theory is integrable, and the S matrix [19], and even certain off-shell information (for $N = 2$) [20], is exactly known. The integrable nature of large-s scattering is also indicated by the form of Reggeized amplitudes [21]. In Ref. [6] it was pointed out that the effective gluon-emission vertex [22] can be derived by considering longitudinal fluctuations before taking the transverse limit $\lambda \to 0$.

The particles of the principal-chiral sigma model are labeled by $r = 1, \ldots, N-1$ [19]. The particle with label r has an antiparticle with label $N - r$. The mass spectrum is

$$m_r = m_1 \frac{\sin\frac{r\pi}{N}}{\sin\frac{\pi}{N}}, \qquad m_1 = K\Lambda(g_0^2 N)^{-1/2} e^{-(4\pi/g_0^2 N)} + \ldots, \tag{1.6}$$

where K is a nonuniversal constant, Λ is the ultraviolet cutoff and the ellipses denote nonuniversal corrections.

We study the physical states for the effective Hamiltonian. They are very similar to those of the $(2+1)$-dimensional model (1.4) and (1.5), already investigated in detail in Refs. [10–14]. Hadrons consist of quarks joined by electric strings. Longitudinal electric flux consists essentially of $(1+1)$-dimensional Yang-Mills strings. In contrast, transverse electric flux is built out of the massive particles of the sigma model. We call these Faddeev-Zamolodchikov (FZ) particles, consistent with the terminology of the operator algebra of the creation and annihilation operators for these particles.

In $(2+1)$ dimensions, the transverse and longitudinal string tensions[2] were first found to leading order in g_0' [10]. Later, the corrections of higher order in g_0' to the longitudinal string tension [11], and the transverse string tension [14], were computed. String tensions for different representations of charges were found, and it was shown that adjoint sources are not confined [12]. The low-lying mass spectrum was studied in Ref. [13].

Both transverse electric flux and longitudinal electric flux have some nonzero thickness. The thickness of transverse flux is due to color smearing of the FZ particles in the longitudinal direction [14]. The thickness of longitudinal flux is caused by creation and destruction of FZ particle pairs, akin to vacuum polarization [11].

[2]In Refs. [10–14], we called the transverse string tension the "vertical string tension" and the longitudinal string tension the "horizontal string tension."

After we discuss these confinement mechanisms for the theory in $(3+1)$ dimensions, we attempt to justify the effective Hamiltonian as an eikonal approximation. This view was advocated in Ref. [6], but we interpret the meaning of the factor λ slightly differently.

Each of the two incoming hadrons in a collision process is a collection of FZ particles, joined by longitudinal electric flux lines. Scattering of two hadrons can involve rearrangement of the flux lines among the FZ particles. It is also possible for a non-Abelian phase rotation of FZ particles to occur as they pass through each other; the phase factor is given by the exact $(1+1)$-dimensional exact S matrix [19]. These two processes are not entirely distinct, as can be seen from an examination of the $1/N$ expansion of this S matrix.

In the next section, we put the Hamiltonian (1.2) on a spatial lattice, then transform to the axial gauge. In Sec. III, we take the continuum limit in the x^3 direction and show that this Hamiltonian is equivalent to a collection of integrable field theories which are coupled together. We discuss confinement of color and find the transverse string tension in Sec. IV. We find the longitudinal string tension in Sec. V. By comparing the electric-field strengths in different directions, we find some justification of the effective Hamiltonian in Sec. VI In Sec. VII, we describe the nature of hadronic states and begin an examination of diffractive hadronic scattering, focusing on the exchange of hadronic flux. We present some conclusions and mention some further directions for research in Sec. VIII.

II. REGULARIZATION AND THE AXIAL GAUGE

Consider a lattice of sites x, whose coordinates are x^j, $j = 1, 2, 3$, where x^j/a are integers, and where a is the lattice spacing. Each link is a pair x, j, and joins the site x to $x + \hat{j}a$, where $\hat{j}$ is a unit vector in the jth direction. We choose temporal gauge $A_0 = 0$. Before any spatial gauge fixing, the degrees of freedom are elements of the group $\mathrm{SU}(N)$ in the fundamental $(N \times N)$-dimensional matrix representation $U_j(x) \in \mathrm{SU}(N)$ at each link x, j. In addition, there are the electric-field operators at each link $l_j(x)_b$, $b = 1, \ldots, N^2 - 1$. The commutation relations on the lattice are

$$\begin{aligned} [l_j(x)_b, l_k(y)_c] &= i\delta_{xy}\delta_{jk} f^d_{bc} l_j(x)_d, \\ [l_j(x)_b, U_k(y)] &= -\delta_{xy}\delta_{jk} t_b U_j(x), \end{aligned} \tag{2.1}$$

all others zero.

The lattice version of (1.2) is $H = H_0 + H' + H''$, where

$$H_0 = \frac{1}{a}\sum_x \left[\frac{g_0^2}{2} l_\perp(x)^2 - \sum_{j=1,2} \frac{1}{4g_0^2}\,\mathrm{Tr}U_j^\square(x)\right],$$

$$H' = \frac{(g_0')^2}{2a}\sum_x l_3(x)^2, \qquad H'' = -\frac{1}{4(g_0'')^2 a}\sum_x \mathrm{Tr}U_3^\square(x), \tag{2.2}$$

and where, as before, $g_0' = \lambda g_0$, $g_0'' = \lambda^{-1} g_0$ and

$$U_i^{\square}(x) = \epsilon^{ijk} U_j(x) U_k(x + \hat{j}a) U_j(x + \hat{k}a)^\dagger U_k(x)^\dagger. \quad (2.3)$$

We need the adjoint representation of the SU(N) gauge field $\mathscr{R}_j(x)$, defined by $\mathscr{R}_j(x)_b{}^c t_c = U_j(x) t_b U_j(x)^\dagger$. This has the properties $\mathscr{R}_j(x) \in \mathrm{SU}(N)/\mathbb{Z}_N$, $\mathscr{R}_j(x)^{\mathrm{T}} \mathscr{R}_j(x) = 1$, and $\det \mathscr{R}_j(x) = 1$. Notice that

$$[\mathscr{R}_j(x)_b{}^c l_j(x)_c, U_k(y)] = -\delta_{xy} \delta_{jk} U_j(x) t_b.$$

Thus $l_j(x)$ generates infinitesimal SU(N) transformations on the left of $U_j(x)$, and $\mathscr{R}_j(x) l_j(x)$ generates infinitesimal SU(N) transformations on the right of $U_j(x)$. The squares of these operators are the same

$$[l_j(x)]^2 = [\mathscr{R}_j(x) l_j(x)]^2,$$

by virtue of the orthogonality of the adjoint representation.

Color-charge operators, denoted by $q(x)_b$, satisfy

$$[q(x)_b, q(y)_c] = \mathrm{i} f_{bc}^d \delta_{xy} q(x)_d. \quad (2.4)$$

Schrödinger wave functions are complex-valued functions of *all* the link degrees of freedom $U_j(x)$. Physical wave functions $\Psi(\{U\})$ satisfy Gauss's law

$$[(\mathscr{D} \cdot l)(x)_b - q(x)_b] \Psi(\{U\}) = 0, \quad (2.5)$$

where (with no summation of j)

$$[\mathscr{D}_j l_j(x)]_b = l_j(x)_b - \mathscr{R}_j(x - \hat{j}a)_b{}^c l_j(x - \hat{j}a)_c. \quad (2.6)$$

Next we impose the axial gauge condition $U_3 = 1$. We take the lattice to be open at $x^3 = 0, L^3$, which means we do not fix any noncontractible Wilson loops. The open boundary condition means, however, that a relic of Gauss's law must still be imposed.

We choose space to be a lattice "cylinder" of size $L^1 \times L^2 \times L^3$, with periodic boundary conditions in the 1 and 2 directions only. This means that for any function of position $f(x)$, we have $f(x^1 + mL^1, x^2 + nL^2, x^3) = f(x)$, for any $m, n \in \mathbb{Z}$. We take components of x to have the values $x^{1,2} = 0, a, 2a, \ldots, L^{1,2} - a$, and $x^3 = 0, a, 2a, \ldots, L^3$. Gauss's law is still given by (2.5), provided (2.6) is modified to

$$\begin{aligned}
\mathscr{D}_3 l_3(x) &= \delta_{x^3 \neq L^3} l_3(x) - \delta_{x^3 \neq 0} \mathscr{R}_3(x^\perp, x^3 - a) l_3(x^\perp, x^3 - a), \\
\mathscr{D}_1 l_1(x) &= l_1(x) - \mathscr{R}_1(x^1 - a, x^2, x^3) l_1(x^1 - a, x^2, x^3), \\
\mathscr{D}_2 l_2(x) &= l_2(x) - \mathscr{R}_2(x^1, x^2 - a, x^3) l_2(x^1, x^2 - a, x^3).
\end{aligned} \quad (2.7)$$

To fix the links in the 3 direction, we need to use (2.5) and (2.7) to solve for l_3:

$$l_3(x) = \sum_{y^3=0}^{x^3} [q(x^\perp, y^3) - (\mathscr{D}_\perp \cdot l_\perp)(x^\perp, y^3)]. \quad (2.8)$$

Some non-Abelian gauge invariance remains, namely,

$$\Gamma(x^\perp) \Psi = \sum_{x^3=0}^{L^3} [(\mathscr{D}_\perp \cdot l_\perp)(x) - q(x)] \Psi = 0. \quad (2.9)$$

This remaining gauge invariance means that (2.8) is equivalent to

$$l_3(x) = -\sum_{z^3 = x^3 + a}^{L^3} [q(x^\perp, z^3) - (\mathscr{D}_\perp \cdot l_\perp)(x^\perp, z^3)]. \quad (2.10)$$

The new expressions for l_3, namely, (2.8) and (2.10), allow us to completely eliminate all degrees of freedom but $U_{2,3}$. We now can write the term in the Hamiltonian (2.2) which depends on the longitudinal electric field as

$$\begin{aligned}
H' = -\frac{(g_0')^2}{2a} \sum_{x^\perp} \sum_{y^3=0}^{x^3} \sum_{z^3 = x^3 + a}^{L^3} &[q(x^\perp, y^3) - (\mathscr{D}_\perp \cdot l_\perp) \\
&\times (x^\perp, y^3)][q(x^\perp, z^3) - (\mathscr{D}_\perp \cdot l_\perp)(x^\perp, z^3)],
\end{aligned}$$

or

$$\begin{aligned}
H' = -\frac{(g_0')^2}{4a^2} \sum_{x^\perp} \sum_{y^3, z^3 = 0}^{L^3} &|y^3 - z^3| [q(x^\perp, y^3) - (\mathscr{D}_\perp \cdot l_\perp) \\
&\times (x^\perp, y^3)][q(x^\perp, z^3) - (\mathscr{D}_\perp \cdot l_\perp)(x^\perp, z^3)]. \quad (2.11)
\end{aligned}$$

In the axial gauge, the longitudinal-electric-field-squared term H' is highly nonlocal in the 3 direction. This nonlocality is a standard feature of physical gauges. This fact has a simple physical interpretation in the case of (2.11). The longitudinal electric field has been eliminated in favor of the transverse degrees of freedom. Now electric flux between two charged transverse plates must be proportional to the longitudinal separation of these plates. This is accounted for by the linear factor in (2.11). On the other hand, the vacuum expectation value of H' must be proportional to the spacial volume $L^1 L^2 L^3$. The nonlocality of (2.11) means that the nature of the vacuum state is subtle. Mandelstam, who considered the analogous continuum Hamiltonian, argued that the vacuum state can only have finite energy density if magnetic condensation takes place [23]. His reasoning was that this is the way in which the vacuum correlator

$$\begin{aligned}
\langle 0 | [q(x^\perp, y^3) - (\mathscr{D}_\perp \cdot l_\perp)(x^\perp, y^3)] \\
\times [q(x^\perp, z^3) - (\mathscr{D}_\perp \cdot l_\perp)(x^\perp, z^3)] | 0 \rangle
\end{aligned}$$

can fall off sufficiently quickly in $|y^3 - z^3|$.

What of the remainder of the Hamiltonian $H_0 + H''$ after gauge fixing? Setting $U_1(x) = 1$, we find

$$H_0 = \sum_{x^\perp} [H_0(x^\perp, 2) + H_0(x^\perp, 3)], \quad (2.12)$$

where

$$H_0(x^\perp, j) = \sum_{x^3=0}^{L^3} \frac{g_0^2}{2a} l_j(x)^2 - \sum_{x^3=0}^{L^3-a} \frac{1}{2g_0^2 a} \mathrm{Re}\,\mathrm{Tr} U_j(x) U_j(x^\perp, x^3 + a)^\dagger. \tag{2.13}$$

On the other hand, the longitudinal magnetic term H'' is unchanged, since it depends only on the transverse components of the gauge field.

Now that the Hamiltonian has been recast in an axial gauge, we may, at least in principle, take the thermodynamic limit, in which L^1, L^2 and L^3 all become infinity.

III. COUPLED (1 + 1)-DIMENSIONAL FIELD THEORIES

Next let us examine each of the terms of the Hamiltonian more closely. We will take a continuum limit in the 3 direction. Thus only the transverse coordinates will be latticized. The resulting structure resembles a transit box for bottles of wine as shown in Fig. 1. Each term $H_0(x^\perp, j)$, defined in (2.13), is a lattice (1 + 1) principal-chiral nonlinear sigma model, with coupling constant g_0. We will regard H_0 as the Hamiltonian of the unperturbed theory and treat H' and H'' as interactions. Notice that the coefficients of each of these terms is small, by virtue of $\lambda \ll 1$. Thus one coupling g_0 is small (to take the continuum limit), another coupling g_0' is much smaller still and the third coupling g_0'' is comparatively extremely large. We shall say more about the sizes of the couplings in the next section.

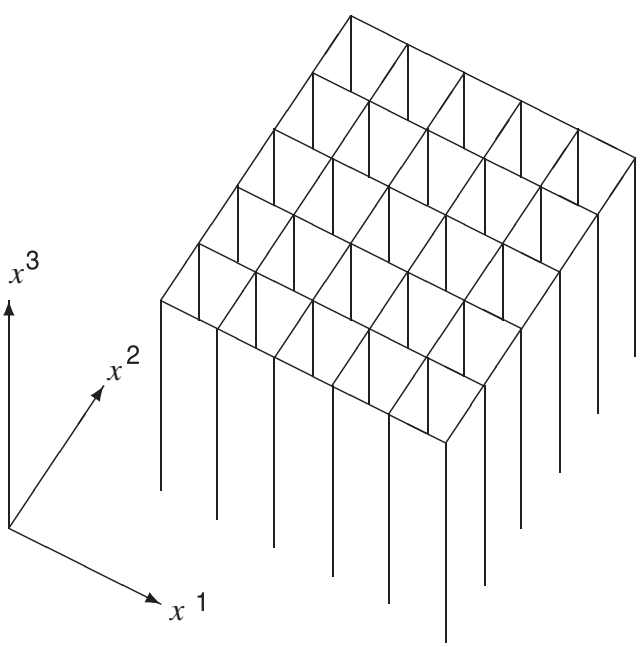

FIG. 1. Space with $x^\perp$ discrete and x^3 continuous resembles the interior of a wine transit box.

We will assume the lattice spacing is small and treat the principal-chiral sigma models as near their thermodynamic and continuum limits. Each sigma model lives in a *band*, that is a two-dimensional strip of length $L^3 \to \infty$ and width a, in the j-3 plane, where $j = 1, 2$. [We referred to bands as layers in the papers on (2 + 1)-dimensional gauge theories. In three spatial dimensions, a different name seems appropriate.] In our wine-transit-box analogy, there are four bands surrounding each wine bottle, and two wine bottles adjacent to each band. We denote the band between the line at $x^\perp$ and the line at $x^\perp + \hat{j}a$ by $(x^\perp, j)$. The left-handed and right-handed currents of sigma model in the band $(x^\perp, j)$ are

$$\mathscr{J}^{\mathrm{L}}_\mu(x^\perp, x^3, j)_b = \mathrm{i}\,\mathrm{Tr} t_b \partial_\mu U_j(x^\perp, x^3) U_j(x^\perp, x^3)^\dagger,$$
$$\mathscr{J}^{\mathrm{R}}_\mu(x^\perp, x^3, j)_b = \mathrm{i}\,\mathrm{Tr} t_b U_j(x^\perp, x^3)^\dagger \partial_\mu U_j(x^\perp, x^3),$$

respectively, where $\mu = 0, 3$. The operator $\mathscr{J}^{\mathrm{L}}_0(x^\perp, x^3, j)$ produces an SU(N) rotation at the edge of the band $(x^\perp, j)$ at $x^\perp$. The operator $\mathscr{J}^{\mathrm{R}}_0(x^\perp, x^3, j)$ produces an SU(N) rotation at the other edge of the band $(x^\perp, j)$ at $x^\perp + \hat{j}a$.

We write H_0 as

$$H_0 = \sum_{x^\perp, j} \int dx^3 \frac{1}{2g_0^2} [\mathscr{J}^{\mathrm{L}}_0(x^\perp, x^3, j)^2 + \mathscr{J}^{\mathrm{L}}_3(x^\perp, x^3, j)^2]. \tag{3.1}$$

The connection between (2.12), (2.13), and (3.1) is made through the Heisenberg equation of motion for U_j. This gives $l_j(x) \approx a g_0^{-2} \mathscr{J}^{\mathrm{L}}_0(x^\perp, x^3, j)$, for small a. Similarly, $\mathscr{R}_j(x) l_j(x) \approx a g_0^{-2} \mathscr{J}^{\mathrm{R}}_0(x^\perp, x^3, j)$. The transverse electric field is now $\mathscr{J}^{\mathrm{LR}}_0$.

The a residual gauge-invariance condition and the longitudinal-electric-field-squared term are written by the same substitution into (2.9) and (2.11), respectively. Residual gauge invariance is now the condition on physical states Ψ

$$\int dx^3 \sum_{j=1,2} [\mathscr{J}^{\mathrm{L}}_0(x^\perp, x^3, j) - \mathscr{J}^{\mathrm{R}}_0(x^\perp - \hat{j}a, x^3, j) - \rho(x^\perp, x^3)]\Psi = 0, \tag{3.2}$$

and the longitudinal-electric-field-squared term is

$$H' = -\frac{(g_0')^2}{4g_0^4 a^2} \sum_{x^\perp} \sum_{j=1,2} \int dx^3 \int dy^3 |x^3 - y^3| \times [\mathscr{J}^{\mathrm{L}}_0(x^\perp, x^3, j) - \mathscr{J}^{\mathrm{R}}_0(x^\perp - \hat{j}a, x^3, j) - \rho(x^\perp, x^3)] \times [\mathscr{J}^{\mathrm{L}}_0(x^\perp, y^3, j) - \mathscr{J}^{\mathrm{R}}_0(x^\perp - \hat{j}a, y^3, j) - \rho(x^\perp, y^3)], \tag{3.3}$$

where $\rho(x^\perp, x^3)$ is a linear charge density, satisfying the algebra

$$[\rho(x^\perp, x^3)_b, \rho(y^\perp, y^3)_c] = i\delta_{x^\perp y^\perp}\delta(x^3 - y^3) f^d_{bc}\rho(x^\perp, x^3)_d. \tag{3.4}$$

The last term in the Hamiltonian is the longitudinal-magnetic-field-squared term

$$H'' = -\frac{1}{4(g_0'')^2 a^2}\sum_{x^\perp}\int dx^3 \mathrm{Re}\,\mathrm{Tr} U^\square(x^\perp, x^3), \tag{3.5}$$

where $U^\square(x^\perp, x^3)$ is given by (2.3), as before.

The terms in the Hamiltonian (3.1), (3.3), and (3.5) and the constraint (3.2) may seem a bit complicated, but they each have a straightforward geometrical interpretation. A sigma model lives in each band $(x^\perp, j)$, whose Hamiltonian is $H_0(x^\perp, j)$. The excitations of H_0 are the FZ particles, which behave like solitons, though they are not quantized versions of classical solutions. Without the interaction terms, these particles move only in the 3 direction, scattering with a nontrivial S matrix. The scattering is integrable, which implies that there is no particle creation or destruction. The elementary $r = 1$ FZ particles are adjoint gluonlike particles [see Eq. (1.6)]. They can be thought of as color dipoles with a right fundamental color charge (anticharge) at $x^\perp$ and a left fundamental anticharge (charge) at $x^\perp + \hat{j}a$. All other FZ particles can be built out of these $r = 1$ "diffractive gluons."

We can regard a line in the 3 direction as a choice of $x^\perp$. Consider now the four bands which meet at this line $x^\perp$, namely, $(x^\perp, 1)$, $(x^\perp, 2)$, $(x^\perp - \hat{1}a, 1)$ and $(x^\perp - \hat{2}a, 2)$, shown in Fig. 2. There are five color charges at the line $x^\perp$, one from each band and one from the color source $\int dx^3 \rho(x^\perp, x^3)$ on the line. The nontrivial constraint (3.2) means that the sum of these five color charges is zero.

The interaction H', as discussed before, is simply the $\mathscr{E}_1^2$ term of the Hamiltonian in the axial gauge.

Finally, the interaction H'' is a discrete version of the integral of the square of the longitudinal magnetic flux. The quantity $\mathrm{Tr} U^\square(x^\perp, x^3)$ is the Wilson loop around four bands (a wine bottle stands in the middle of these four bands), shown in Fig. 3.

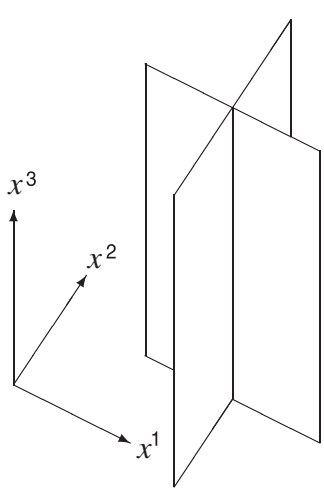

FIG. 2. The four bands meeting at the line of fixed $x^\perp$.

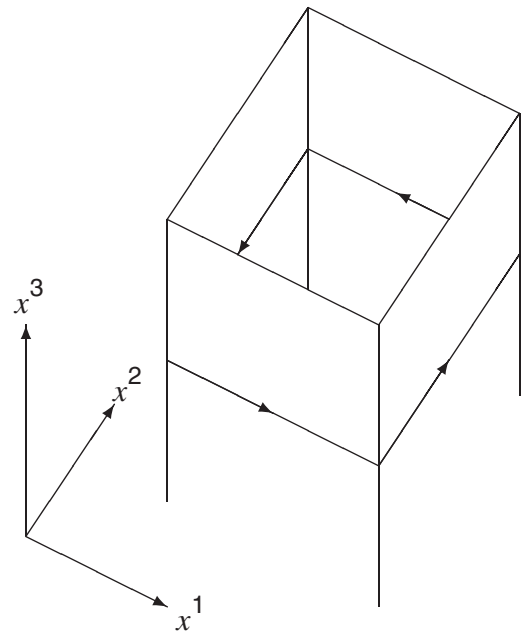

FIG. 3. The Wilson loop $U^\square(x^\perp, x^3)$, directed counterclockwise around four bands.

IV. TRANSVERSE CONFINEMENT

Next we explain how transverse confinement works for our effective gauge theory. The mechanism does not rely on our taking the continuum limit of the coordinate x^3; it holds just as well on the three-dimensional lattice. The key ingredients are the mass gap of H_0 and residual gauge invariance (2.9) or (3.2). We will show that our explanation makes sense for

$$(g_0')^2 = \frac{g_0^4}{(g_0'')^2} \ll \frac{1}{g_0} e^{-4\pi/(g_0^2 N)}. \tag{4.1}$$

Our arguments are adapted from Ref. [10].

Let us first consider the extreme case of $\lambda = 0$. In this case, $g_0' = 0$ and $g_0'' = \infty$, so that $H = H_0$. Let us place a quark at $u^\perp$, u^3 and an antiquark at $v^\perp$, v^3. We now ask what the ground-state energy is, with these sources introduced. This energy is an eigenvalue of H_0. Since H_0 is the sum of nonlinear sigma models, we try to put as many as possible of these sigma models in their ground states. In other words, we want as many bands of our wine transit box as possible to be unoccupied by FZ particles. Consider the effect of the residual condition on states, (3.2). This tells us that we cannot make all four of the bands meeting at $u^\perp$ in a color-singlet state, due to the presence of the quark at $u^\perp$. Now we want the sigma model in each of these bands $(u^\perp, 1)$, $(u^\perp, 2)$, $(u^\perp - \hat{1}a, 1)$ and $(u^\perp - \hat{2}a, 2)$ to be in an eigenstate (since we seek the lowest-energy eigenstate of H_0). Now at least one of these four sigma

models cannot be in a color-singlet state. The Hohenberg-Mermin-Wagner theorem tells us that there is no spontaneous symmetry breaking for the vacuum of a (1 + 1)-dimensional field theory. Hence the vacuum must be a singlet. Any nonsinglet eigenstate must therefore have energy of at least the mass gap, m_1. So at least one of the four sigma models must contain an FZ particle, say, $(u^\perp, 1)$. If there is no color source in the line $u^\perp + \hat{1}a$, then by the constraint (4.1), at least one of the other three sigma models in bands adjacent to this line, namely, $(u^\perp + \hat{1}a, 1)$, $(u^\perp + \hat{1}a, 2)$ and $(u^\perp + \hat{1}a - \hat{2}a, 2)$, must also be excited, by the same reasoning. Continuing in the this way, there must be a connected two-dimensional union of bands in which all the sigma models are excited, terminating at $u^\perp$. For the energy to be finite, this two-dimensional union of bands must also terminate at $v^\perp$, where the antiquark is present.

The physical picture of transverse confinement is the following. Imagine we look at the quark-antiquark pair from a great distance along the 3 direction. We see a string of FZ particles in the transverse plane, joining the quark to the antiquark, as in Fig. 4. The potential is the sum of the masses of all these FZ particles. As it happens, the potential is not rotation invariant, even in the transverse plane. If the quark and antiquark are separated along the 1 or 2 directions, however, the potential between these sources is linear with transverse string tension

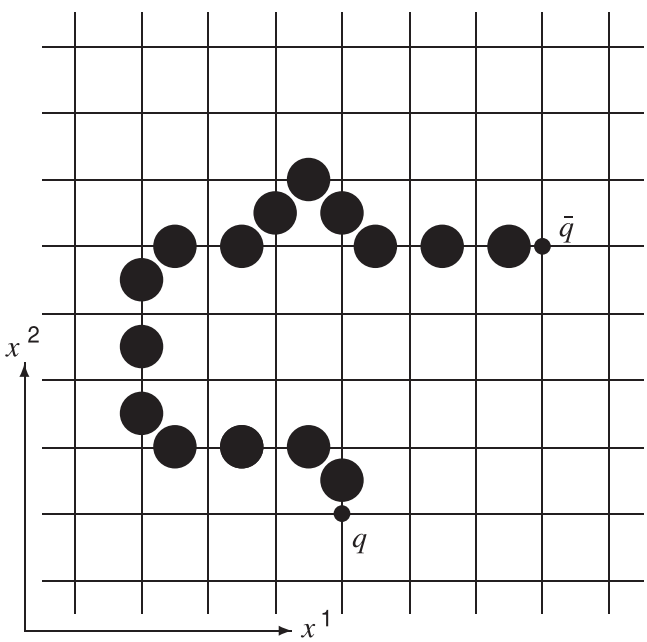

FIG. 4. The transverse projection of a transverse string, built out of FZ particles (represented by large bullets), joining a quark to an antiquark (represented by small bullets). Longitudinal flux lines join the particles together. These flux lines are parallel to the line of sight, hence are not visible. The neighboring FZ particles and sources in this figure are not adjacent, in general, since they may be located at different values of x^3.

$$\sigma_\perp = \frac{m_1}{a}. \tag{4.2}$$

The lack of rotational invariance around the x^3 axis seems unrealistic, but we will argue at the end of this section that this invariance comes about when H' and H'' are included.

We can readily see that certain spacelike Wilson loops have an area law. Consider a rectangular loop in the x^1-x^3 plane. By virtue of the gauge condition $U_3 = 1$, this loop breaks apart into a product of sigma-model correlation functions. Suppose the dimensions of the loop are M^1 and M^3 in the 1 and 3 directions, respectively. Then the Wilson loop is roughly (in that we are being sloppy with contractions of group indices)

$$A \sim \prod_{x^3=y^3}^{y^3+M^3} \langle 0|U_1(x^\perp, x^3)U_1(x^\perp + \hat{1}M^1, x^3)^\dagger|0\rangle.$$

Each of the correlation functions in this product decays exponentially as

$$\langle 0|U_1(x^\perp, x^3)U_1(x^\perp + \hat{1}M^1, x^3)^\dagger|0\rangle \sim e^{-m_1 M^1},$$

where $|0\rangle$ is the vacuum of the sigma model. Therefore the Wilson loop behaves as

$$A \sim \exp{-\sigma_\perp M^1 M^3}. \tag{4.3}$$

Loops oriented in the x^2-x^3 plane behave exactly the same way.

Let us now suppose we increase λ a bit, so that it is no longer zero, but so that (4.1) is satisfied. Then the coefficients of H' and H'' are small compared to m_1/a. We have three mass scales in the problem, namely, m_1, $(g_0')^2/a$ and $1/[(g_0'')^2 a]$. If the first of these mass scales is much greater than the other two, transverse confinement will still hold. Finding the correction to the potential (as g_0' is increased and g_0'' is decreased) will require the application of exact matrix elements; current form factors for H' [20] and field form factors for H'' [24]. The inclusion of these terms will mean that FZ particles interact between adjacent bands. There are also processes whereby FZ particles can be created or destroyed, due to these interactions. These effects mean that the theory is no longer integrable, though it is nearly so, provided (4.1) holds.

The correction to the transverse string tension for (2 + 1)-dimensional SU(2) gauge theory comes from the lower-dimensional analogue of H' (there is no term analogous to H'') [14]. This correction is due to fluctuations of positions of FZ particles, bound by longitudinal strings. The longitudinal string potential (which we discuss in the next section) is not linear at short distances, but quadratic; this is due to the fact that the color of an FZ particle is smeared in the longitudinal direction. The actual distribution of color is approximately Gaussian, which can be found using a form factor for the current operator of the sigma model [20].

We expect that corrections coming from the inclusion of H'' make the potential invariant with respect to rotations about the 3 axis. This is because H'' acting on string states deforms the contour of the string in the transverse plane. Perturbation theory in this term should therefore cause the string to fluctuate enough to make a rotation-invariant potential (this is what happens in Hamiltonian-strong-coupling perturbation theory [25]).

V. LONGITUDINAL CONFINEMENT

Next we will show how longitudinal confinement takes place. Again, the reasoning is essentially that of Ref. [10].

Let us next consider a quark and antiquark separated in the 3 direction only, with coordinates $u^\perp$, u^3 and $u^\perp$, v^3, respectively. If $g_0' = 0$, there is just a constant potential between the sources, since longitudinal electric flux costs no energy. If we assume $g_0' \neq 0$ and (4.1) instead, then electric flux does cost some energy. Furthermore this flux will be concentrated along the line $u^\perp$. The reason for this concentration is that if any flux leaves this line, residual gauge invariance (4.1) implies that one of the four bands $(u^\perp, 1)$, $(u^\perp, 2)$, $(u^\perp - \hat{1}a, 1)$, $(u^\perp - \hat{2}a, 2)$ cannot be in a singlet state. Hence at least one of these four bands is excited with an energy of at least the sigma-model gap m_1. The mass gap tends to prevent flux spreading transversely.

We can now estimate the longitudinal string tension. It is simply the string tension of a Yang-Mills theory in one space and one time dimension, with coupling g_0'/a:

$$\sigma_{\mathrm{L}} = \frac{(g_0')^2}{a^2} C_N, \tag{5.1}$$

where C_N is the Casimir of SU(N). Notice that the physical mechanism of longitudinal confinement is a dual Meissner effect, though no assumptions of magnetic condensation have been made.

Note that if we simply took $\lambda = 0$ [6], we would have transverse confinement, but no longitudinal confinement. The term H' is essential for the longitudinal string tension.

Corrections of higher order in (g_0') to (5.1) come from virtual pairs of FZ particles. The analogous calculation in $(2 + 1)$ dimensions has already been done [11].

VI. THE EFFECTIVE HAMILTONIAN AS AN EIKONAL APPROXIMATION FOR QCD

We now argue that the effective Hamiltonian is an eikonal approximation for QCD. A conventional approach to this approximation [26] is to take the fields from one incoming particle in that particle's rest frame, boost them to the lab frame, and consider the wave function of the second particle in the presence of those fields (afterwards one can improve the result by iteratively imposing unitarity). We point out in this section that the rescaling of the coupling constant in (1.1), (1.2), and (2.2) produces "boosted" electric fields.

The value of g_0' must be chosen so that the ratio of the longitudinal string tension to the transverse string tension is small. This ratio, from (4.2) and (5.1), is

$$\frac{\sigma_{\mathrm{L}}}{\sigma_\perp} = \frac{(g_0')^2}{m_1 a} = \frac{\lambda^2 g_0^2}{m_1 a}.$$

We can turn this expression around to find

$$\lambda^2 = \frac{m_1 a}{g_0^2} \frac{\sigma_{\mathrm{L}}}{\sigma_\perp}. \tag{6.1}$$

Suppose now we consider two incoming hadrons, traveling in the 3 direction, with velocity $\pm v$. If the electric and magnetic fields of a hadron in its rest frame are $\mathscr{E}_k'$ and $\mathscr{B}_k'$, respectively, then in the lab frame

$$\mathscr{E}_1 = \frac{\mathscr{E}_1' \pm v\mathscr{B}_2'}{\sqrt{1 - v^2}}, \qquad \mathscr{E}_2 = \frac{\mathscr{E}_2' \mp v\mathscr{B}_1'}{\sqrt{1 - v^2}}, \qquad \mathscr{E}_3 = \mathscr{E}_3'. \tag{6.2}$$

If we assume the magnetic fields inside the hadron are random, then the average of the ratio of the longitudinal electric field to the transverse electric field is $\sqrt{1 - v^2}$. We substitute this for $\sigma_{\mathrm{L}}/\sigma_\perp$ in (6.1) to obtain

$$\lambda^2 = \frac{m_1 a}{g_0^2} \sqrt{1 - v^2}. \tag{6.3}$$

Note that (6.1) means that large velocity v implies small λ. We have thereby interpreted the rescaling of the coupling constants in (1.1), (1.2), and (2.2) as the result of hadrons moving at high velocities. To make such an interpretation sensible, however, the velocity in the transformed coordinates (that is, the coordinates defined after the rescaling) should be small. Otherwise, the expression (6.1) cannot be used. This means that to consider large-s processes, λ should be taken small, but velocities in our new coordinates should be nonrelativistic.

Our justification of the rescaling as an eikonal approximation is rather heuristic. It seems strange, because it contradicts the fact that under a simple rescaling, the longitudinal component of velocity does not change. We are arguing that there really is an anomalous transformation of the velocity. Before rescaling the velocity is close to zero, but afterwards, it is given by (6.3). It seems worth making the argument more rigorous. This could conceivably be done with anisotropic renormalization-group methods [13,14,16,17].

VII. HADRONIC STATES AND DIFFRACTIVE SCATTERING

The structure of hadrons for our effective action is rather similar to that of the strong-coupling picture [9], despite the fact that only one coupling g_0'' is strong, all others being weak [the same is true in the $(2 + 1)$-dimensional case

where all couplings are weak]. Hadrons are built out of strings connecting quarks. Strings terminate at quarks, and N of them can meet in junctions. Thus we have a string-parton picture, in which the partons are quarks and FZ particles.

The transverse projection of a state of two baryons approaching each other longitudinally is shown in Fig. 5. The hadrons can collide at coincident lines or bands. Let us suppose we neglect $H' + H''$. In the case of overlapping sites (but without overlapping at adjacent links), longitudinal flux exchange (LFE) at lines of fixed $x^\perp$ can happen, but nothing else occurs. The LFE amplitude can be thought of as due to resonance between different flux arrangements and is of order $1/N$, as we explain in the next paragraph.

The LFE process is analogous to the case of meson scattering in $(1 + 1)$ dimensions. We can think of the two FZ particles adjacent to the line $x^\perp$ (in one hadron) as being similar to two sources of fundamental color in that line (recall that FZ particles are dipoles, and each of them has one fundamental source adjacent to the line). Thus LFE is essentially similar to flux exchange in $(1 + 1)$-dimensional QCD. This nonplanar process is of order $1/N$ [27]. An example of LFE is shown in Fig. 6.

We note that the world sheet of longitudinal electric flux lines during LFE has the same topology as that of Pomeron exchange in string models.

In the case of two hadrons intersecting the same band, i.e. with colliding FZ particles, the S matrix of the principal-chiral sigma model comes into play. We note that this $(1 + 1)$-dimensional S matrix is unity in the large-N limit, $N \to \infty$, $g_0^2 N$ fixed. Thus in this limit, no interaction occurs. In the $1/N$ expansion of this S matrix, however, LFE occurs [19].

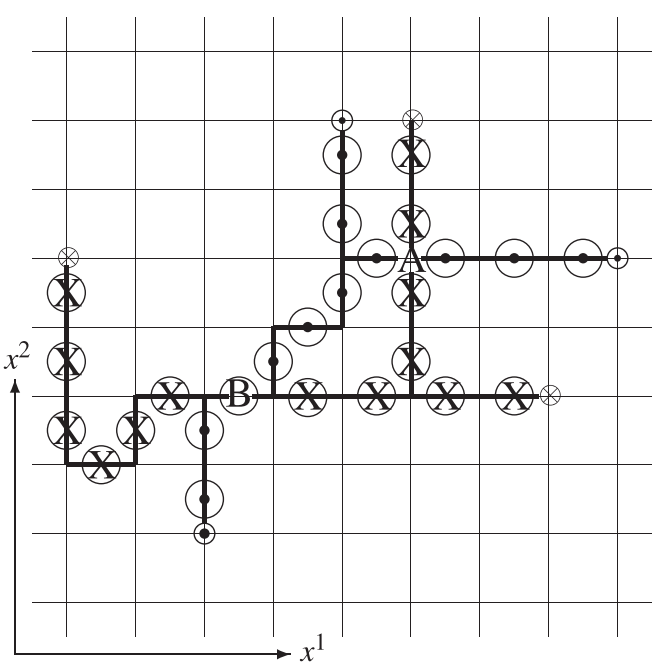

FIG. 5. Longitudinally approaching baryons. Large circles represent FZ particles, and small circles represent quarks. The symbol ⊙ means that the constituent particle (FZ particle or quark) is coming out of the page, and the symbol ⊗ means that it is going into the page. Strings of FZ particles can intersect at lines of fixed $x^\perp$ (A) or overlap at transverse bands (B).

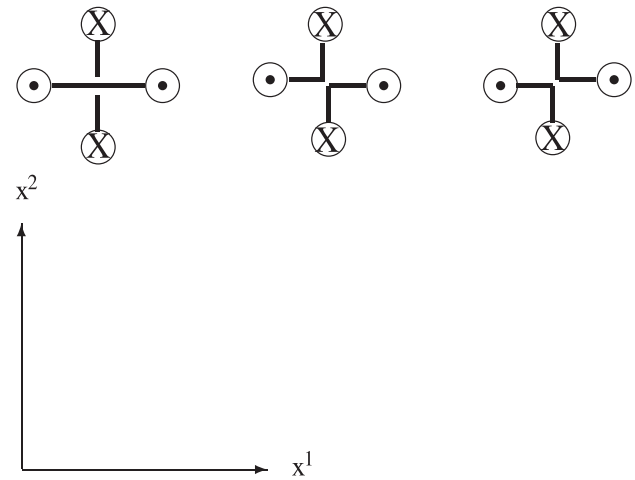

FIG. 6. An example of LFE is resonance between the configurations shown here, resembling (A) in Fig. 5. Longitudinal flux lines are present, in general, in the second and third diagrams. The particles shown can be either quarks or FZ particles.

VIII. CONCLUSIONS

In this paper, we have considered the anisotropic effective theory of Ref. [6], which is a longitudinally rescaled Yang-Mills theory, with rescaling parameter λ. We have shown that this theory confines for sufficiently small λ and a natural string-parton picture emerges. The partons are valence quarks and the solitonlike FZ particles of the principal-chiral nonlinear sigma model. The interpretation of this effective action as an eikonal approximation is rather subtle, since electric fields are much stronger in the transverse than the longitudinal direction, even for slow-moving hadrons. We have argued that this interpretation is correct, provided colliding hadrons are moving anomalously slowly in the rescaled coordinates. An important process in hadronic scattering in the forward direction is the exchange of longitudinal flux, even if FZ particles collide.

There are essentially two areas which come to mind for further investigation.

We would like to improve our understanding of confinement for the anisotropic gauge theory considered here. This is not a strong-coupling gauge theory, but rather a hybrid gauge theory where one coupling, namely, g_0'', is strong and the rest are weak. A demonstration that confinement still holds if g_0'' is weak would be real progress on the QCD confinement problem. We have been investigating expansions in $(g_0'')^{-2}$ using field form factors of the sigma model [24], but as yet have no simple argument that

confinement holds for small g_0''. In any case, it seems possible to generalize our calculations of the corrections to the longitudinal [11] and string tensions [14], and to the mass spectrum [13] to (3 + 1) dimensions, with g_0'' large, but not infinite.

The other problem of importance is the forward scattering amplitude of hadron-hadron scattering. We hope that its solution will yield a quantitative understanding of the Pomeron. The solution will require some control of LFE processes. We believe that this problem is tractable. We have argued in Sec. VI that in the new coordinates, momenta should be taken as small as possible; in this way the electric fields are longitudinally boosted as they should be. Thus, LFE processes can be studied in a nonrelativistic context. We hope to make progress on this problem soon. Some assumptions may need to be made for the distributions of partons within a hadron. A good starting point should be the solution of hadron-hadron scattering in (2 + 1) dimensions, where the parton distributions are simpler.

ACKNOWLEDGMENTS

We thank Gregory Korchemsky for a brief but very informative discussion, Jamal Jalilian-Marian for inspiration and Poul Henrik Damgaard for encouragement. This research was supported in part by the National Science Foundation, under Grant No. PHY0653435, and by a grant from the PSC-CUNY.

[1] L. N. Lipatov, Nucl. Phys. **B365**, 614 (1991).
[2] L. McLerran and R. Venugopalan, Phys. Rev. D **49**, 2233 (1994); **49**, 3352 (1994); **50**, 2225 (1994); **59**, 094002 (1999).
[3] Y. Kovchegov, Phys. Rev. D **54**, 5463 (1996); **55**, 5445 (1997).
[4] J. Jalilian-Marian, A. Kovner, L. McLerran, and H. Weigert, Phys. Rev. D **55**, 5414 (1997); J. Jalilian-Marian, A. Kovner, A. Leonidov, and H. Weigert, Nucl. Phys. **B504**, 415 (1997); Phys. Rev. D **59**, 014014 (1998); **59**, 034007 (1999); J. Jalilian-Marian, A. Kovner, and H. Weigert, Phys. Rev. D**59**, 014015 (1998); J. Jalilian-Marian and X. N. Wang, Phys. Rev. D **60**, 054016 (1999); A. Kovner and J. G. Milhano, Phys. Rev. D **61**, 014012 (1999).
[5] J. Jalilian-Marian, S. Jeon, and R. Venugopalan, Phys. Rev. D **63**, 036004 (2001).
[6] H. Verlinde and E. Verlinde, Princeton University, Report No. PUPT-1319, 1993 (to be published); arXiv:hep-th/9302104.
[7] R. Kirschner, L. N. Lipatov, and L. Szymanowski, Nucl. Phys. **B425**, 579 (1994); Phys. Rev. D **51**, 838 (1995).
[8] Y. Hatta, E. Iancu, L. McLerran, A. Stasto, and D. N. Triantafyllopoulos, Nucl. Phys. A **764**, 423 (2006).
[9] J. B. Kogut and L. Susskind, Phys. Rev. D **11**, 395 (1975).
[10] P. Orland, Phys. Rev. D **71**, 054503 (2005).
[11] P. Orland, Phys. Rev. D **74**, 085001 (2006).
[12] P. Orland, Phys. Rev. D **75**, 025001 (2007).
[13] P. Orland, Phys. Rev. D **75**, 101702(R) (2007).
[14] P. OrlandPhys. Rev. D **77**, 025035 (2008).
[15] W. A. Bardeen and R. B. Pearson, Phys. Rev. D **14**, 547 (1976); W. A. Bardeen, R. B. Pearson, and E. Rabinovici, Phys. Rev. D **21**, 1037 (1980).
[16] I. Ya. Aref'eva, Phys. Lett. B **325**, 171 (1994); Phys. Lett. B **328**, 411 (1994).
[17] I. Ya. Aref'eva and I. V. Volovich, Steklov Math. Inst. Report No. SMI-15-94, 1994 (unpublished); arXiv:hep-th/9412155.
[18] A. D. Patel, Nucl. Phys. B, Proc. Suppl. **94**, 260 (2001); R. Ratabole, Nucl. Phys. B, Proc. Suppl. **129**, 889 (2004).
[19] E. Abdalla, M. C. B. Abdalla, and A. Lima-Santos, Phys. Lett. B **140**, 71 (1984); P. B. Wiegmann, Phys. Lett. B **142**, 173 (1984); A. M. Polyakov and P. B. Wiegmann, Phys. Lett. B **131**, 121 (1983); P. B. Wiegmann, Phys. Lett. B **141**, 217 (1984).
[20] M. Karowski and P. Weisz, Nucl. Phys. **B139**, 455 (1978).
[21] L. N. Lipatov, Pisma Zh. Eksp. Teor. Fiz. **59**, 571 (1994) [JETP Lett. **59**, 596 (1994)]; L. D. Faddeev and G. P. Korchemsky, Phys. Lett. B **342**, 311 (1995).
[22] V. Fadin, E. Kuraev, and L. N. Lipatov, Sov. Phys. JETP **44**, 443 (1976); Ya. Balitski and L. N. Lipatov, Sov. J. Nucl. Phys. **28**, 822 (1978).
[23] S. Mandelstam, Phys. Rep. **23**, 245 (1976); Bull. Am. Phys. Soc. **22**, 541 (1977); Phys. Rev. D **19**, 2391 (1979).
[24] J. Balog and P. Weisz, Nucl. Phys. **B778**, 259 (2007).
[25] J. B. Kogut, D. K. Sinclair, R. B. Pearson, J. L. Richardson, and J. Shigemitsu, Phys. Rev. D **23**, 2945 (1981).
[26] G. 't Hooft, Phys. Lett. B **198**, 61 (1987); Nucl. Phys. **B304**, 867 (1988); R. Jackiw, D. Kabat, and M. Ortiz, Phys. Lett. B **277**, 148 (1992).
[27] G. 't Hooft, Nucl. Phys. **B75**, 461 (1974).