Island formation without attractive interactions

A. P. J. Jansen
Laboratory of Inorganic Chemistry and Catalysis, ST/SKA, Eindhoven University of Technology, P.O. Box 513, 5600 MB Eindhoven, The Netherlands

(Received 6 February 2008; published 26 February 2008)

We show that adsorbates on surfaces can form islands even if there are no attractive interactions. Instead, strong repulsion between adsorbates at short distances can lead to islands, because such islands increase the entropy of the adsorbates that are not part of the islands. We suggest that this mechanism causes the observed island formation in O/Pt(111), but it may be important for many other systems as well.

DOI: 10.1103/PhysRevB.77.073408 PACS number(s): 68.43.Hn, 64.60.De, 68.37.−d

Lateral interactions between adsorbates are extremely important for the kinetics of surface reactions, mainly because they determine the structure of the adlayer. Island formation is invariably assigned to attractive interaction between the adsorbates, but reliable estimates for lateral interactions are hard to obtain so that really little is known about such interactions. State-of-the-art calculations of the lateral interactions for atoms and small molecules yield reliable repulsive interactions, but attractive interactions, which are generally weaker, are harder to obtain. Moreover, other experimental results may only be consistent with repulsive interactions or attractive interactions that are too small to stabilize islands. We discuss this for oxygen atoms on Pt(111), which is a particularly well studied system. We show that the islands that are observed for that system may be formed without attractive interactions. On the contrary, strong repulsive interactions between adsorbates at short distance may lead to islands because these lower the entropy.

Low energy electron diffraction (LEED) patterns of O/Pt(111) indicate island formation with a $p(2\times2)$ structure,[1] which is assigned to attractive interaction between oxygen atoms at a distance of $2a$, with a the distance between two neighboring fcc hollow adsorption sites.[2–4] Recently, there have been density-functional theory (DFT) calculations of the lateral interactions that indeed showed attraction at that distance.[2,5] The problem with DFT calculations is whether this interaction can be calculated reliably. We have also done DFT calculations of a large number of adlayer structures of O/Pt(111), but instead of determining the lateral interaction by straightforward multivariate linear regression, we used a cross validation method as well.[5–7] This is a statistical technique that has been used extensively to determine the interactions between atoms in alloys reliably,[8,9] and also more recently for lateral interactions.[10] We found that it was not possible to compute an accurate interaction at distance $2a$. If we, nevertheless, tried to do that, we found error bars that were almost an order of magnitude larger than the absolute value of the interaction itself. If we varied the set of adlayer structures, from which the lateral interactions were determined, we found a large variation in the value of the interaction; most of the time, it was repulsive, but sometimes attractive. So we concluded that a value of this interaction from DFT calculations is not to be trusted.

That current DFT may not be able to say anything about the interaction at the $2a$ distance does not mean that it cannot be attractive. However, the presence or absence of an attractive interaction in O/Pt(111) has also been discussed by Zhdanov and Kasemo while discussing temperature-programmed desorption (TPD) experiments of this system.[11] In these spectra, there is no indication that there is an attractive lateral interaction. Their conclusions were that if there is an attractive interaction, then it is so small that it cannot lead to island formation at the temperatures of the LEED experiment. We have refined the kinetic Monte Carlo simulation of the TPD spectra that were used by Zhdanov and Kasemo,[6] and we have determined the lateral interactions by fitting the simulated TPD spectra to the experimental ones. No attractive interactions were obtained. Moreover, the values we obtained in this way agreed very well with those obtained from DFT calculations when cross validation was used.

These observations led to the question if it is possible to have island formation without attractive interactions. We will show in this Brief Report that this is indeed possible because of entropic reasons. Remarkably, we will show that small islands lead to a higher entropy only when there are repulsive interaction, not at the distances between the adsorbates as observed in the island, but at shorter distances.

To study the effect of entropy on the island formation in O/Pt(111), we have modeled the system as a hexagonal grid representing the fcc hollow sites, which are the preferred sites of oxygen atoms.[12] The interactions between the oxygen atoms are modeled using hard-sphere interactions. These are such that two nearest-neighbor sites cannot both be occupied at the same time, and neither can two next-nearest-neighbor sites. The shortest distance between two oxygen atoms is then $2a$. Apart from these two hard-sphere interactions, there are no other interactions in our model. This model has been studied by Koper and Lukkien to model the butterfly in voltammetry.[13] It has an order-disorder phase transition at around 0.18ML. At higher coverages, the adlayer has the $p(2\times2)$ structure also observed in LEED. We are, however, interested at lower coverages where the adlayer has no long-range order.

Figure 1 shows simulated LEED patterns for a number of coverages. It can clearly be seen that the adlayer has some structure. At coverages just below the order-disorder transition, the peaks are sharp. The pattern is characteristic for a $p(2\times2)$ structure with the nearest distance between the adsorbates of $2a$. At very low coverages, the peaks become diffuse, but are still clearly visible.

 ©2008 The American Physical Society

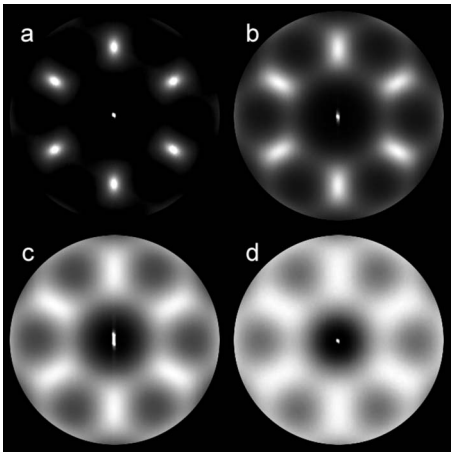

FIG. 1. Simulated LEED patterns for the hard-sphere model of O/Pt(111) at coverages (a) 0.16, (b) 0.12, (c) 0.08, and (d) 0.04. The relative intensity of the peaks are 100, 11, 3.7, and 1.3, respectively.

To understand how the LEED pattern arises, it is convenient to look at another one-dimensional model that has essentially the same characteristics as the hard-sphere model for O/Pt(111). In this model, we have S sites numbered from 0 to $S-1$ with periodic boundary conditions. There are A adsorbates, and one adsorbate is always adsorbed on site 0. Two neighboring sites cannot both be occupied by an adsorbate at the same time. The probability that a site n is occupied, $P(n)$, can be determined from the fundamental hypothesis of statistical mechanics that all acceptable configurations are equally likely. Because two adsorbates cannot be nearest neighbors, we have $P(1)=P(S-1)=0$. The probability $P(2)$ is equal to the ratio of the number of configurations with site 2 occupied and the total number of configuration. This is given by

$$P(2)=\frac{N(A-2,S-5)}{N(A-1,S-3)}, \tag{1}$$

where $N(n,L)$ is the number of configurations with n adsorbates distributed over L consecutive sites. We are assuming that the adsorbates are indistinguishable so that we have the recursion relation

$$N(n,L)=N(n,L-1)+N(n-1,L-2), \tag{2}$$

with the boundary conditions $N(n,L)=\delta_{n0}$ if $L\leqslant 0$. [The expressions change somewhat when we assume distinguishable adsorbates, but the probabilities $P(n)$ remain the same.]

For $A=2$, we have $N(0,L)=1$ and $N(1,L)=L$ from the recursion relation so that $P(2)=1/(S-3)$. This value is equal to the average occupation of sites from 2 to $S-2$. This is to be expected; the second adsorbate will have equal probability to occupy any of the sites from 2 to $S-2$. For $A=3$, we have $N(2,L)=(L-1)(L-2)/2$ if $L\geqslant 3$ so that $P(2)=2/(S-4)$. We see that, in this case, the probability of occupation is more than double the average occupation, which is the first indication that there is a tendency for clustering.

If site 3 is occupied, then the other adsorbates must be somewhere at sites from 5 to $S-2$. This means

$$P(3)=\frac{N(A-2,S-6)}{N(A-1,S-3)}. \tag{3}$$

For $A=2$, we get $P(3)=P(2)=1/(S-3)$. For $A=3$, we get $P(3)=2(S-6)/[(S-4)(S-5)]$. Again, we have a higher probability than the average occupation if $S\geqslant 7$, but $P(3)=0$ if $S=6$. In any case, we have $P(2)>P(3)$. We see that there is a tendency for the other adsorbates to be as close as possible to the adsorbate that is always at site 0. The tendency lessens if one goes farther from site 0. When $A=3$ and $S=6$, we have $P(3)=0$ because there is a maximum number of adsorbates with alternating sites occupied and vacant.

If the number of adsorbates increases, and when we look at the occupation of sites farther from site 0, then the analytical expressions for the probabilities of occupation become quite complex. It is possible to show that

$$P(n)=\frac{1}{N(A-1,S-3)}\sum_{m=0}^{A-1}N(m,n-3)N(n-m-1,S-m-4). \tag{4}$$

It is hard to see from this expression how $P(n)$ varies with n. It seems, therefore, easier for moderate values of S to simply do a simulation in which all configurations are generated, and from that, determine the occupation of all sites. Figure 2 shows the result for $S=42$. The tendency, which we mentioned already, of the adsorbates to cluster is apparent from this figure even if there are only a few adsorbates. We also see that we get "islands" with adsorbates separated by a distance that is twice the distance between neighboring sites. The origin of this clustering is the fact that when two subsequent adsorbates are closer together, then the other adsorbates have more sites over which to distribute, and hence, a higher entropy.

The same probabilities can be computed for the hard-sphere model of O/Pt(111) (see Fig. 3). This can be done either with a small grid and by generating all possible configurations or with a larger grid and by doing a Monte Carlo simulation. We did both using a 10×10 grid to generate all

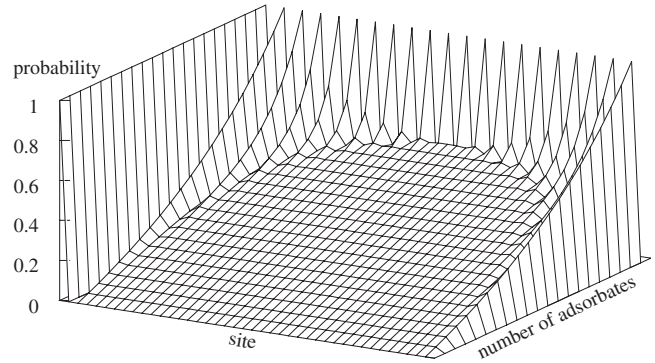

FIG. 2. Occupation of all sites for the one-dimensional model with 42 sites. The number of adsorbates ranges from 1 to 21, being small in front and large at the back. Site 0 on the left is always occupied.

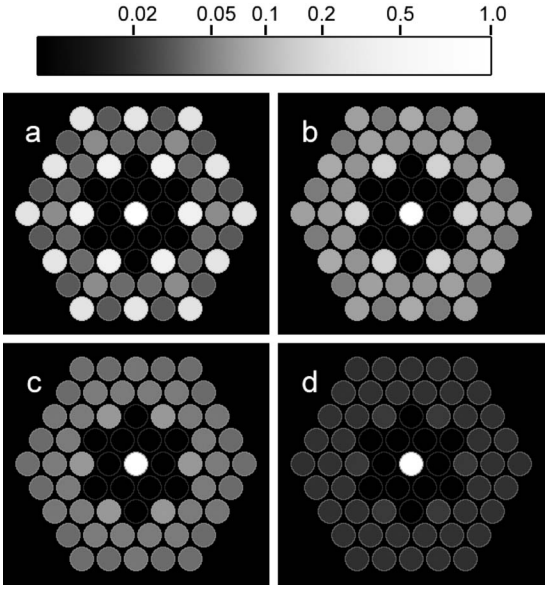

FIG. 3. Probability of occupation of sites for the hard-sphere model of O/Pt(111). The central site is occupied in each case. The brightness indicates the probability that neighboring sites are occupied (see the scale at the top). The coverages are (a) 0.16, (b) 0.12, (c) 0.08, and (d) 0.04.

configurations, and a 64×64 grid for Monte Carlo simulations. The results were the same.

For coverages just below the phase transition, there is a clear indication already that a $p(2\times2)$ structure is being formed [see Fig. 3(a)]. For lower coverages, this structure becomes harder to see in the figure. (The nearest and next-nearest sites are not occupied, of course.) There is, however, a higher probability than average for the next-next-nearest neighbor site, i.e., the nearest site to be occupied in a $p(2\times2)$ structure. This is clearly visible at a coverage of 0.12, also visible at 0.08, but hard to see at 0.04, although the occupation of the next-next-nearest neighbor site is still about 11% higher than average even at this low coverage.

The islands that are formed are not static features of the adlayer. They are also quite small at low coverages, as can be seen from Fig. 4. Snapshots of the Monte Carlo simulations with a 64×64 grid show islands of about 10–15 oxygen atoms at a coverage of 0.12, and 5–8 atoms at 0.08. At a coverage of 0.04, only rarely more than two atoms are found together. Nevertheless, this suffices for the structure in the LEED as shown in Fig. 1.

A remarkable aspect of the mechanism of the island formation here is the fact that there must be repulsive interactions. If we allow two next-nearest neighbor sites to be occupied simultaneously, we still get island formation, but the structure observed in the LEED is then $p(\sqrt{3}\times\sqrt{3})$. If we also allow nearest-neighbor sites to be occupied, then no island formation takes place anymore. The reason is that there is no entropy gain anymore by moving two adsorbates closer together to increase the number of configurations for the other adsorbates. Without the repulsion, the number of available sites for those other adsorbates is always equal to the number of vacant sites and independent of the way the two adsorbates are positioned.

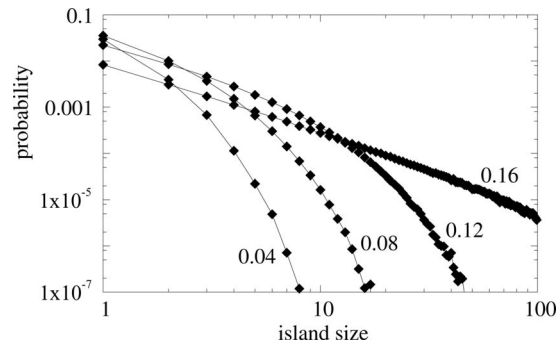

FIG. 4. Probability per site of having an island with a certain number of adsorbates as a function of the number of these adsorbates. Small islands are found with higher probability at lower coverages, whereas larger islands have a higher probability at higher coverages. The numbers next to the results stand for the coverage.

A better model for O/Pt(111) than the hard-sphere model is one with realistic values for the lateral interactions. Although DFT calculations with cross validation indicate that the next-next-nearest neighbor interaction cannot be determined, there are other interactions that can be obtained. We have shown that DFT results can be reproduced with an error of only 2.6 kJ/mol with an adsorption energy of an isolated oxygen atom of −396.3 kJ/mol (with respect to a bare substrate and an oxygen atom in the gas phase), a nearest-neighbor interaction of 19.9 kJ/mol (positive values indicate repulsion), a next-nearest neighbor interaction of 5.5 kJ/mol, and a three-particle interaction of 6.1 kJ/mol that occurs if three atoms are in a row at nearest-neighbor distances.[6,7] The last interaction can be ignored for the coverages of interest here, because the strong repulsion between oxygen atoms at nearest-neighbor positions prevents even two atoms from getting at these positions, let alone three. The next-nearest neighbor interaction corresponds to a thermal energy of about 660 K, so there is an appreciable probability to find two oxygen atoms at next-nearest neighbor positions. Still, Monte Carlo simulations with these more realistic interactions yield simulated LEED spectra with negligible difference from those in Fig. 1.

To summarize, island formation in the adlayer as observed in LEED does not need to be caused by attractive interactions between adsorbates. Island formation can also be favored for entropic reasons, because when some adsorbates get close together, there is more space for other adsorbates. This extra space means that these other adsorbates can form more different configurations and, hence, have a higher entropy. A remarkable requisite for this mechanism to work is that there must be a strong repulsion between the adsorbates at short distances. The distance between the adsorbates in the islands is then larger than this distance at which there is repulsion. We have shown the results of this mechanism for a hard-sphere interaction model and a model with realistic lateral interactions for O/Pt(111), but there seems to be no reason why the mechanism should not work in other adlayers too. Calculations of lateral interactions seem to suggest that a strong repulsion between adsorbates in nearest-neighbor positions is common.[7] This means that island formation at low coverages should be common as well. Because the mecha-

nism here is purely entropic and there is no energy, the island formation is temperature independent. If there are also energetic contributions, then the mechanism should work especially at higher temperatures, where it may dominate interactions that favor other adlayer structures. [Strictly speaking, we have not proven that there is no attractive interaction in O/Pt(111), but such an interaction is, as shown by Zhdanov and Kasemo,[11] too weak to be relevant.]

Ordering effects due to entropy date back at least to Onsager's hard-rod model for liquid crystals.[14] The depleted volume effect in that model and the spatial effects due to the repulsive interactions here are similar. There is an important difference however. There is a clear distinction between degrees of freedom in the hard-rod model. In that model, the orientational entropy decreases when a nematic phase is formed, but the positional entropy increases. A similar partitioning of degrees of freedom is found in more recent models.[15] Here, this is not the case, and the model is simpler. Oscillations found in the density of a gas near the wall of a microchannel could be explained with a model having similarities to the hard-sphere model here,[16] as could the variation in the distribution of molecules in the channels of a one-dimensional zeolite with variable pore diameter.[17] Once again, however, the model here is simpler. Moreover, it is the first model on entropic ordering in adlayers.

[1] D. H. Parker, M. E. Bartram, and B. E. Koel, Surf. Sci. **217**, 489 (1989).

[2] H. Tang, A. Van der Ven, and B. L. Trout, Phys. Rev. B **70**, 045420 (2004).

[3] M. Nagasaka, H. Kondoh, I. Nakai, and T. Ohta, J. Chem. Phys. **122**, 044715 (2005).

[4] C. Sendner and A. Groß, J. Chem. Phys. **127**, 014704 (2007).

[5] A. P. J. Jansen and W. K. Offermans, in *Computional Science and Its Applications—ICCSA-2005, LNCS 3480*, edited by O. Gervasi (Springer, Berlin, 2005).

[6] A. P. J. Jansen and W. K. Offermans, J. Comput. Methods Sci. Eng. **2**, 351 (2002).

[7] C. G. M. Hermse and A. P. J. Jansen, in *Catalysis*, edited by J. J. Spivey and K. M. Dooley (Royal Society of Chemistry, London, 2006), Vol. 19.

[8] A. van der Walle and G. Ceder, J. Phase Equilib. **23**, 348 (2002).

[9] V. Blum and A. Zunger, Phys. Rev. B **69**, 020103(R) (2004).

[10] Y. Zhang, V. Blum, and K. Reuter, Phys. Rev. B **75**, 235406 (2007).

[11] V. P. Zhdanov and B. Kasemo, Surf. Sci. **415**, 403 (1998).

[12] W. K. Offermans, A. P. J. Jansen, and R. A. van Santen, Surf. Sci. **600**, 1714 (2006).

[13] M. T. M. Koper and J. J. Lukkien, J. Electroanal. Chem. **485**, 161 (2000).

[14] L. Onsager, Ann. N.Y. Acad. Sci. **51**, 627 (1947).

[15] D. Frenkel and A. A. Louis, Phys. Rev. Lett. **68**, 3363 (1992).

[16] S. V. Nedea, A. J. H. Frijns, A. A. van Steenhoven, A. P. J. Jansen, A. J. Markvoort, and P. A. J. Hilbers, J. Comput. Phys. **219**, 532 (2006).

[17] D. Schuring, A. P. J. Jansen, and R. A. van Santen, J. Phys. Chem. B **104**, 941 (2000).