Magnetoresistance of a two-dimensional electron gas in weakly modulated magnetic fields

A. Matulis* and F. M. Peeters†
Department of Physics, University of Antwerp (UIA), B-2610 Antwerp, Belgium
(Received 25 January 2000)

The semiclassical conductance of a two-dimensional electron gas is calculated in the presence of a one-dimensional modulated magnetic field with zero average. In the limit of small magnetic-field amplitudes (B) the contribution of the magnetic modulation to the magnetoresistance increases as $B^{3/2}$ in the diffusive limit, while the increase is linear in B in the ballistic regime. Temperature does not influence the power law behavior but it decreases the prefactor of this functional behavior.

In recent years there has been an increased interest[1] in hybrid systems which promise to increase the functionality of present day semiconductor devices. One example of such type of systems is those in which semiconductors and magnetic materials are combined where the magnetic material provides a local magnetic field which influences locally the motion of the electrons in the semiconductor. The latter is usually a heterostructure which contains a two-dimensional electron gas (2DEG). The 2DEG acts as a detector measuring the magnetic state of the magnetic material. Previously, the coupling between such a nonhomogeneous magnetic field and the 2DEG was demonstrated[2] in the case where the magnetic field (B) was directed perpendicular to the 2D plane. In this case one has a modulation of the B field on top of a homogeneous background field and the influence of the B-field modulation on the 2DEG is relatively weak.[3]

When the magnetic field is directed parallel to the 2DEG the magnetic material is magnetized parallel to the 2D plane which leads to fringing fields near the edge of the magnetic material having a nonzero magnetic-field component perpendicular to the 2D layer. Those fields form a magnetic barrier[4,5] for the electron motion in the 2D plane. Because now there is no background perpendicular magnetic field for the 2DEG, the influence on the resistance of such magnetic barriers is much more pronounced and large increases in the magnetoresistance have been found.[6–8]

In the present work we investigate the magnetotransport in weak modulated magnetic fields for which the average B field is zero. For the case the typical magnetic energy is much smaller than the Fermi energy a semiclassical analysis is applicable. We find that in the diffusive regime the correction to the magnetoresistance exhibits a *nonanalytical* behavior in the limit of small magnetic-field amplitudes which differs from the behavior in the ballistic regime.

We consider electrons moving in a two-dimensional xy plane. The magnetic field, directed along the z direction, is periodic along the x direction $\vec{B}=B(0,0,b(x/l_0))$ with period l_0, where $b(x)$ is a periodic $[b(x+1)=b(x)]$ dimensionless function describing the magnetic-field modulation with zero average value.

In a semiclassical analysis the electron motion in a magnetic field is described by the following Hamiltonian (or its energy):

$$\varepsilon=\frac{1}{2m}\left\{p_x^2+\left[p_y-\frac{eBl_0}{c}a(x/l_0)\right]^2\right\}, \tag{1}$$

where m is the electron effective mass, $\vec{p}=(p_x,p_y)$ is the electron canonical momentum, and the dimensionless periodic function

$$a(x)=\int^x dx'b(x'), \tag{2}$$

characterizes the vector potential $\vec{A}=Bl_0(0,a(x/l_0),0)$ which is taken in the Landau gauge. The quantum energy spectrum of electrons in modulated magnetic fields was studied in Refs. 9 and 10.

We restrict our analysis to the case where the electron transition through a single period is ballistic, i.e., the mean free path $l=v_F\tau\gg l_0$ (v_F is the electron Fermi velocity and τ the relaxation time) and the motion in the sample is diffusive; i.e., the mean free path is smaller than the size of the sample ($l\ll L_x,L_y$). For diffusive transport and in the limit of small magnetic fields ($\omega_c\tau\ll 1$) the expression for the average conductivity tensor is given by the following integral over the electron phase space (x,p_x,p_y):

$$\sigma_{ij}=-\frac{e^2}{(2\pi\hbar)^2L_x}\int_0^{L_x}dx\int_{-\infty}^{\infty}dp_x\int_{-\infty}^{\infty}dp_y\tau v_iv_j\frac{\partial f_F}{\partial\varepsilon}, \tag{3}$$

where the symbol $f_F(\varepsilon)=\{\exp\{(\varepsilon-\mu)/k_BT\}+1\}^{-1}$ stands for the equilibrium electron Fermi-Dirac distribution function with T the temperature and μ the chemical potential which equals the Fermi energy $E_F=\pi\hbar^2n/m$ in the zero-temperature limit, where n is the 2D electron density. Note that the coordinate y is excluded from the phase space as the system is homogeneous in that direction. The expressions for the electron velocities follow from the Hamilton equations of motion:

$$v_x=\frac{\partial\varepsilon}{\partial p_x}=\frac{1}{m}p_x,$$

$$v_y=\frac{\partial\varepsilon}{\partial p_x}=\frac{1}{m}\left\{p_y-\frac{eBl_0}{c}a(x/l_0)\right\}. \tag{4}$$

First, let us consider the conductivity in the zero-temperature limit when the derivative of the Fermi function reduces to a δ function. The component σ_{yy} can be calculated straightforwardly, and as the sample is homogeneous

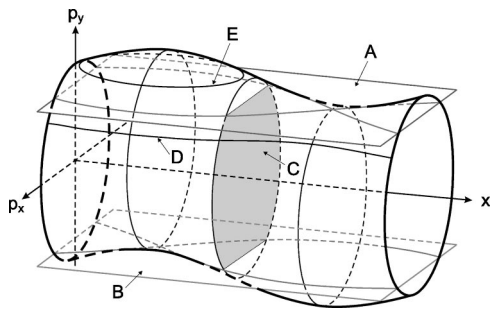

FIG. 1. Fermi surface (thick solid curve) in phase space. Planes A and B are surfaces for the constant of motion p_y delimiting the open and closed orbits. Curve $E(D)$ is an example of a closed (open) orbit.

along the y direction, all trajectories have to be taken into account. Inserting expression (4) into the conductivity expression (3) we obtain

$$\sigma_{yy}=\frac{e^2}{(2\pi\hbar)^2L_x}\int_0^{L_x}dx\int_{-\infty}^{\infty}dp_x\int_{-\infty}^{\infty}dp_y\tau\frac{1}{m^2}\times\left\{p_y-\frac{eBl_0}{c}a(x/l_0)\right\}^2\times\delta\left\{E_F-\frac{1}{2m}\left[p_x^2+\left(p_y-\frac{eBl_0}{c}a(x/l_0)\right)^2\right]\right\},\quad(5)$$

which leads to the well-known magnetic-field-independent result

$$\sigma_{yy}=\sigma_0=\frac{e^2E_F\tau}{2\pi\hbar^2}.\quad(6)$$

We assumed that the relaxation time depends only on the electron energy and therefore for the case of zero temperature it can be replaced by the constant value $\tau=\tau(E_F)$. Thus the weak magnetic-field modulation in the x direction does not change the conductivity in the y direction, as expected.

The calculation of σ_{xx} is more complicated because for sufficiently strong magnetic fields (or small electron velocity, but such that $\hbar\omega_c\ll E_F$) some electrons can be forced into *snake orbits*. The electron motion on such orbits oscillates in the x direction around the average value x_0. Therefore, such electrons do not contribute to j_x, and consequently, in the expression for the conductivity σ_{xx} those snake orbits have to be excluded. The classification of all possible electron orbits is given in Fig. 1 where the Fermi surface $\varepsilon(p_x,p_y,x)=E_F$ is plotted. In the case of zero temperature only electrons with trajectories on the Fermi surface contribute to the conductivity integral. As the energy (1) does not depend on y, the momentum p_y is conserved, and consequently the trajectories are defined by the intersection of the above Fermi surface with the $p_y=C^{te}$ planes. It is apparent from Fig. 1 that there are two types of trajectories. The trajectories as indicated by the symbol D are able to run along the whole x axis. Such electrons are moving along *open* trajectories and they will contribute to the current along the x direction. The other trajectories, indicated by the symbol E, are *closed* and they correspond to the snake orbits. Thus we can separate the conductivity into two parts

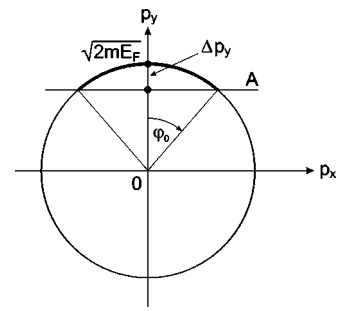

FIG. 2. Contour for angular integration in expression (9). Line A corresponds to the Fermi surface intersection indicated by plane A in Fig. 1.

$$\sigma_{xx}=\sigma_0-\sigma_{xx}^{\text{s.o.}},\quad(7)$$

where the symbol $\sigma_{xx}^{\text{s.o.}}$ stands for the snake orbit contribution. The latter term defines the decrement of the conductivity due to the modulated magnetic field, and in the limiting case of small magnetic fields it is proportional to the increase of the magnetoresistance due to the magnetic field modulation.

The snake orbits are located above the plane A and below the plane B. Those planes are defined by $p_y(A)=\sqrt{2mE_F}+(eBl_0/c)a_{\min}$ and $p_y(B)=-\sqrt{2mE_F}+(eBl_0/c)a_{\max}$, with $a_{\min}=\min\{a(x)\}$ and $a_{\max}=\max\{a(x)\}$ the extremal points of the vector potential $a(x)$. Thus we can write

$$\sigma_{xx}^{\text{s.o.}}=\sigma_A+\sigma_B,\quad(8)$$

where the contribution from the snake orbits above the A plane is given by

$$\sigma_A=\frac{e^2}{(2\pi m\hbar)^2L_x}\int_0^{L_x}dx\int_{-\infty}^{\infty}dp_xp_x^2\int_{-\infty}^{\infty}dp_y\tau\times\delta\left\{E_F-\frac{1}{2m}\left[p_x^2+\left(p_y-\frac{eBl_0}{c}a(x/l_0)\right)^2\right]\right\}\times\Theta\left\{p_y-\frac{eBl_0}{c}a_{\min}-\sqrt{2mE_F}\right\},$$
$$=\frac{e^2E_F\tau}{2\pi^2\hbar^2L_x}\int_0^{L_x}dx\int_{-\varphi_0}^{\varphi_0}\sin^2(\varphi)d\varphi.\quad(9)$$

Here the angular integration has to be performed over the white sections of the circle C in Fig. 1 or, equivalently, along the bold arch shown in Fig. 2. The limiting angle is defined as $\varphi_0=\arccos(1-\Delta p_y/\sqrt{2mE_F})$, with $\Delta p_y=(eBl_0/c)\{a(x/l_0)-a_{\min}\}$. In the asymptotic case of small magnetic-field modulations it becomes $\varphi_0=\sqrt{2\Delta p_y/\sqrt{2mE_F}}$. In the latter case the integration in expression (9) leads to

$$\sigma_A=\frac{e^2E_F\tau}{2\pi^2\hbar^2L_x}\int_0^{L_x}dx\int_{-\varphi_0}^{\varphi_0}\varphi^2d\varphi=\sigma_{yy}c_A\left(\frac{B}{B_0}\right)^{3/2},\quad(10)$$

where $B_0=(2\pi c\sqrt{mE_F})/(el_0)$, and

$$c_A=\frac{8\times2^{1/4}\sqrt{\pi}}{3}\int_0^1dx\{a(x)-a_{\min}\}^{3/2}.\quad(11)$$

The integration over the snake orbits below the plane B leads to the same expression (10) except that now the coefficient c_A has to be replaced by

$$c_B=\frac{8\times 2^{1/4}\sqrt{\pi}}{3}\int_0^1 dx\{a_{\max}-a(x)\}^{3/2}. \tag{12}$$

Thus the resistance change due to the modulated magnetic field becomes $\Delta R_{xx}/R_0=(c_A+c_B)(B/B_0)^{3/2}$ where R_0 is the resistance in the absence of any magnetic-field modulation.

As a special case let us consider a simple cosine periodic magnetic field modulation (with period l_0) $b(x)=\cos(2\pi x)$, which leads to $a(x)=\sin(2\pi x)/2\pi$. In this case the coefficients can be easily evaluated:

$$c_0=c_A+c_B=\frac{8\times 2^{3/4}}{3\pi}\int_{-1/4}^{1/4} dx\{\sin(2\pi x)+1\}^{3/2}$$

$$=\frac{64\times 2^{1/4}}{9\pi^2}\approx 0.86. \tag{13}$$

In the present classical ballistic situation an electron which passed through the first magnetic barrier will also pass through the other barriers. As a consequence the above result can also be applied to the *one-barrier* situation. The periodic oscillating Fermi surface shown in Fig. 1 reduces now to a single step. The trajectories of D type (i.e., the open orbits) contribute to the σ_{xx} conductivity, but the snake orbits (trajectories of A type) are replaced by trajectories which reflect from the barrier. The integral in expression (10) must now be evaluated over those reflected trajectories. When the barrier thickness $l_o \ll L_x$, the integral $\int_{-L_x/2}^{L_x/2} dx[a(x/l_0)-a_{\min}]^{3/2}$ becomes the sample length multiplied by the total vector potential increment over the barrier: $L_x\{a_{\max}-a_{\min}\}^{3/2}$, where $a_{\max}=a(L_x/2)$ and $a_{\min}=a(-L_x/2)$.

A single magnetic-field barrier in a 2DEG, created experimentally by parallel magnetization of magnetic strips placed on top of the 2DEG, can be represented by[7,11]

$$B_z(x)=\frac{\mu_0 M}{4\pi}\ln\frac{x^2+d^2}{x^2+(d+D)^2}. \tag{14}$$

The magnetic strip has a thickness D with magnetization M along the x axis and is placed a distance d from the 2D electron system. The vector potential is obtained by integrating Eq. (14) over $(-L_x/2, L_x/2)$ which gives $A_{\max}-A_{\min}=\mu_0 MD/2$ where use has been made of $L_x \gg d,D$ which is valid in typical experimental situations and $A=Bl_0 a$. Finally, we obtain for the contribution of the reflected trajectories to the conductance

$$-\frac{\sigma_{xx}^{\text{r.t.}}}{\sigma_{yy}}=\frac{\Delta R_{xx}}{R_0}=\frac{2^{1/4}}{3\pi}\left(\frac{e\mu_0 MD}{c\sqrt{mE_F}}\right)^{3/2}. \tag{15}$$

The main feature of the obtained magnetoresistance is its nonanalytical behavior $B^{3/2}$ for small magnetic-field amplitudes. It is remarkable that it does not depend on the actual form of the modulating field, but it is determined by the density of snake orbits (or reflected trajectories) at the Fermi surface.

For nonzero temperature, the previous effect will be suppressed by thermal fluctuations. To generalize our results to nonzero temperature we have to replace any function $G(E_F)$ which depends on the Fermi energy E_F by the corresponding average over the derivative of the Fermi function:

$$G(\mu)=\frac{1}{T}\int_0^\infty d\varepsilon\frac{\exp[(\varepsilon-\mu)/k_BT]G(\varepsilon)}{\{\exp[(\varepsilon-\mu)/k_BT]+1\}^2}. \tag{16}$$

Consequently, taking into account σ_{yy} [Eq. (6)], and the dependence of B_0 on E_F we obtain for the snake orbit contribution to the conductivity:

$$\sigma_{xx}^{\text{s.o.}}(T)=\left(\frac{e^2\tau c_0}{2\pi\hbar^2}\right)\times\left(\frac{Bel_0}{c\sqrt{m}}\right)^{3/2}\frac{1}{T}\int_0^\infty d\varepsilon\frac{\exp[(\varepsilon-\mu)/k_BT]\varepsilon^{1/4}}{\{\exp[(\varepsilon-\mu)/k_BT]+1\}^2}, \tag{17}$$

where we assumed that the relaxation time does not depend on the energy. In the limit of small temperatures the integral can be evaluated analytically and we arrive at the final expression for the conductivity along the direction of the magnetic-field modulation:

$$\frac{\sigma_{xx}}{\sigma_0}=\left\{1-c_0(T)\left(\frac{B}{B_0}\right)^{3/2}\right\}, \tag{18}$$

where

$$c_0(T)=c_0\left\{1-\frac{\pi^2}{32}\left(\frac{k_BT}{\mu}\right)^2\right\}. \tag{19}$$

Notice that the temperature decreases the nonanaliticity coefficient c_0 (with about 30% when $k_BT=\mu$) but does not influence the power law dependence.

Tunneling through magnetic barriers in the ballistic regime was studied numerically in Refs. 4 and 5. For weak barriers only electrons impinging on the magnetic barrier under an angle $\theta\approx\pi/2$ [i.e., $\cos(\theta)\approx(\pi/2-\theta)=\phi$] are reflected and thus we obtain from Eq. (6) of Ref. 5 the conductance change due to tunneling through a weak magnetic barrier:

$$-\Delta G\approx\frac{1}{2}G_0\int_0^{\varphi_0}\varphi d\varphi, \tag{20}$$

where $G_0=e^2mv_FL_y/\pi^2\hbar^2=(2e^2/h)(2L_y/\lambda_F)$ with $L_y=W$ the width of the sample and λ_F the Fermi wavelength. Notice that the difference with the diffusive case is the power of the angle φ in the expression for the conductance and conductivity. In the case of ballistic transport the conductance is proportional to v_x, while for diffusive transport [see Eq. (3)] we have v_x^2. This difference leads to a linear B dependence in the ballistic regime:

$$-\frac{\Delta G}{G_0}=\frac{\Delta R_{xx}}{R_0}=\frac{\Delta p_y}{2\sqrt{2mE_F}}=\frac{e\mu_0 MD}{4c\sqrt{2mE_F}}. \tag{21}$$

The above expression is obtained for the single barrier (14) and agrees with Eq. (3) of Ref. 7 with $c=D/2$.

Let us compare these results with the experiments of Refs. 6 and 7. In Ref. 6 a Co strip of thickness $D=90$ nm was placed a distance $d=35$ nm from a 2DEG formed in a GaAs heterostructure with $E_F=15.7$ meV. The magnetization of the Co strip[12] was $\mu_0 M \approx 9B$ with a saturation magnetization of 1.6 T. In this experiment one is in the diffusive regime and inserting these values in Eq. (15) we obtain $\Delta R_{xx}/R_0 = 4.3B(T)^{3/2}$. The estimated zero field resistance[12] was $R_0 = 2.35\ \Omega$ which results in $\Delta R_{xx}(\Omega)=10.1B(T)^{3/2}$ and agrees with the experimental[12] low-magnetic-field behavior $\Delta R_{xx}(\Omega)=9B(T)^{3/2}$.

In contrast, the experiments of Vančura *et al.*[7] are closer to the ballistic regime (they have been performed on shorter samples, i.e., $L_x=34\ \mu$ m). They placed rectangular Co dots of thickness $D=100$ nm above a 2DEG of width $L_y=W=20\ \mu$m in a GaAs heterostructure with $E_F=19.7$ meV. Inserting these values into Eq. (19) we obtain $\Delta R_{xx}/R_0 = 1.8B(T)$ where $R_0=1/G_0=10.8\ \Omega$. This gives $\Delta R_{xx}(\Omega) = 19.4B(T)$ which is a factor of 2.2 larger than the experimental result $\Delta R_{xx}(\Omega)=8.75B(T)$. Thus we find a reasonable agreement between theory and experiment but it is clear that all details are not yet fully understood. The discrepancy may be due to the fact that the Co dots are not homogeneously magnetized. Nevertheless, the linear magnetic-field dependence is nicely reproduced.

In conclusion we obtained the change in the magnetoresistance due to the presence of magnetic barriers with zero average magnetic field. We found that for diffusive transport the magnetoresistance increases as $c(T)B^{3/2}$ with the amplitude of the magnetic barrier (B) where the coefficient $c(T)$ decreases with increasing temperature. This result is different from the ballistic regime where the increase is linear in B.

This work was partially supported by the Flemish Science Foundation (FWO-Vl), IMEC, and IUAP-IV. One of us (F.M.P.) is a research director with FWO-Vl and he acknowledges discussions with V. Kubrak, T. Ihn, and B. Gallagher.

*Permanent address: Semiconductor Physics Institute, Goštauto 11, 2600 Vilnius, Lithuania.

†Electronic address: peeters@uia.ua.ac.be

[1] For a recent review, see F. M. Peeters and Jo De Boeck, in *Handbook of Nanostructured Materials and Nanotechnology*, edited by H. S. Nalwa (Academic Press, New York, 1999), Vol. 3, p. 345.

[2] H.A. Carmona, A.K. Geim, A. Nogaret, P.C. Main, T.J. Foster, M. Henini, S.P. Beaumont, and M.G. Blamire, Phys. Rev. Lett. **74**, 3009 (1995); P.D. Ye, D. Weiss, R.R. Gerhardts, M. Seeger, K. von Klitzing, K. Eberl, and H. Nickel, *ibid.* **74**, 3013 (1995); S. Izawa, S. Katsumoto, A. Endo, and Y. Iye, J. Phys. Soc. Jpn. **64**, 706 (1995).

[3] F.M. Peeters and P. Vasilopoulos, Phys. Rev. B **47**, 1466 (1993).

[4] F.M. Peeters and A. Matulis, Phys. Rev. B **48**, 15 166 (1993).

[5] A. Matulis, F.M. Peeters, and P. Vasilopoulos, Phys. Rev. Lett. **72**, 1518 (1994). The definition of G_0 in Eq. (6) of this paper should be divided by $2\pi^2$.

[6] V. Kubrak, F. Rahman, B.L. Gallagher, P.C. Main, M. Henini, C.H. Marrows, and M.A. Howson, Appl. Phys. Lett. **74**, 2507 (1999); V. Kubrak, A. C. Neumann, B. L. Gallagher, P. C. Main, M. Henini, C.H. Marrows, and M. A. Howson, Physica E (Amsterdam) **6**, 755 (2000).

[7] T. Vančura, T. Ihn, S. Broderick, K. Ensslin, W. Wegscheider, and M. Bichler (unpublished).

[8] M. Kato, A. Endo, and Y. Iye, Phys. Rev. B **58**, 4876 (1998); M. Kato, A. Endo, M. Sakairi, S. Katsumoto, and Y. Iye, J. Phys. Soc. Jpn. **68**, 1492 (1999); M. Kato, A. Endo, S. Katsumoto, and Y. Iye, *ibid.* **68**, 2870 (1999).

[9] I.S. Ibrahim and F.M. Peeters, Am. J. Phys. **63**, 171 (1995); Phys. Rev. B **52**, 17 321 (1995).

[10] S.D.M. Zwerschke, A. Manolescu, and R.R. Gerhardts, Phys. Rev. B **60**, 5536 (1999).

[11] J. Reijniers and F.M. Peeters, Appl. Phys. Lett. **73**, 357 (1998).

[12] V. Kubrak (private communication).