conditions (25) and (27), the expression (76) for neutral atoms takes the form

$$\langle r^2\rangle = 6Z\mu^2\left[\int_0^X x\Psi(x)dx - \tfrac{1}{3}CX^3\right], \qquad (77)$$

where C is given by (28). The integral occurring in (77) was evaluated numerically for each value of Z, and the value of X obtained from extrapolation to $Z-N=0$ of the X versus $(Z-N)/Z$ data. The magnetic susceptibilities and electric polarizabilities were then computed by means of (73) and (74). The corresponding quantities were also computed for the TF and TFD models.[30] The results are presented in Tables I and II and compared with experiment, the latter values being obtained from Ref. 4.

TABLE I. Magnetic susceptibilities χ (10^{-6} cm^3) for atoms of various elements.

	Ar	Cr	Kr	Xe	U
TF model	81.0	···	102.0	117.0	···
TFD model	22.1	···	35.0	45.5	···
Present model	20.88	25.96	33.00	43.61	59.25
Hartree field	20.6	···	···	···	···
Experimental	19.5	···	28.0	42.4	···

[30] The TFD model calculations were based on the potential tables given by L. H. Thomas, J. Chem. Phys. **22**, 1758 (1954).

TABLE II. Atomic polarizabilities α (10^{-24} cm^3) for atoms of various elements.

	Ar	Cr	Kr	Xe	U
TF model	47.78	43.41	37.92	33.13	27.74
TFD model	2.85	···	3.60	4.02	···
Present model	2.54	2.95	3.17	3.70	4.00
Empirical	1.65	···	2.50	4.10	···

We see that in general our model leads to some improvement in the agreement with experiment although the agreement is not yet quantitatively precise. From the results for argon we may observe that our model leads to much the same value for the magnetic susceptibility as that obtained by the much more cumbersome method of the Hartree self-consistent field.

ACKNOWLEDGMENTS

The author wishes to thank K. J. Hebert and W. Teitelman of the California Institute of Technology Computing Center for their help with the numerical computations. He is also indebted to Professor H. A. Weidenmüller for several helpful discussions.

PHYSICAL REVIEW VOLUME 132, NUMBER 3 1 NOVEMBER 1963

$2P \rightarrow 1S$ Transitions in Muonic Tl, Pb, and Bi*†

WILLIAM B. ROLNICK‡
Columbia University, New York, New York
(Received 27 June 1963)

The mixing of states of a muonic atom with the nucleus in an excited state into the states with the nucleus in the ground state, for natural Tl, Pb, and Bi (due to the multipole interactions between the nucleus and the muon), is calculated. This effect fails to explain the ratio of the number of $2P_{1/2}\rightarrow 1S_{1/2}$ to $2P_{3/2}\rightarrow 1S_{1/2}$ transitions (expected to be 0.5 in the absence of mixing) as observed by Frati and Rainwater. In Bi, the calculation shows that the mixing is negligible, but the observed ratio was 0.75 ± 0.05; in Tl (where the ratio was 0.97 ± 0.09) the off-diagonal matrix elements of the Hamiltonian, required for this effect to be the sole cause of the change of ratio, differs from theory by two standard deviations. For Pb the observed ratio agrees with theory and the calculated mixing is, indeed, negligible. If we assume that some unknown effect is acting in Bi and is of the same order of magnitude in Tl, then the difference between the ratio in Tl from that in Bi is explained by the above mixing. This assumption is suggested by the fact that Tl is one proton below and Bi is one proton above a magic number closed shell (82). We suppose that this unknown effect is absent in Pb since it is a magic number nucleus (82 protons). It is proven that nonresonant effects, due to spin-independent operators, cannot affect the radiative-transition sum rules. This is applied to nonresonant hyperfine mixing and a hypothetical nuclear-Auger effect.

I. INTRODUCTION

IN recent muonic atom studies by Frati and Rainwater,[1] the relative number of $2P_{1/2}\rightarrow 1S_{1/2}$ transitions to $2P_{3/2}\rightarrow 1S_{1/2}$ transitions $[W(2P\rightarrow 1S)]$ is reported for various atoms. The values obtained for natural Tl and Bi are well above the value which is predicted by the sum rules. {Since the relative population of the $2P_{1/2}$ to $2P_{3/2}$ states measured in the $3D\rightarrow 2P$ transitions $[W(3D\rightarrow 2P)]$ was approximately $\frac{1}{2}$, the sum rules would have predicted that $W(2P\rightarrow 1S)$ had approximately the same value.} The mechanism invoked to explain this is the mixing of the state $|2P_{1/2}$

* Research partially supported by the U. S. Atomic Energy Commission.
† Research will be the basis of a Doctoral dissertation.
‡ Presently a Pfister Fellow.
[1] W. Frati and J. Rainwater, Phys. Rev. **128**, 2360 (1962). (Theoretical values here were calculated by K. W. Ford and J. G. Wills; their values for Bi have been corrected.)

muon, nucleus in first excited state (1)] into the state $|2P_{3/2}$ muon, nucleus in ground state (0)]. In Tl, this could occur because the states are nearly degenerate. In Bi, a large off-diagonal matrix element of the Hamiltonian could mix the states even though they are not close in energy; the large spin of the nucleus ($\frac{9}{2}$) is the supposed cause of this large off-diagonal element. The $|2P,0]$ have been populated from higher $|nL,0]$ levels (mostly from the $|3D,0]$ levels), whereas the nucleus is not excited by the usual radiative or Auger transitions.[2] This resonance phenomenon has the effect of: (1) bleeding the $|2P_{3/2},0]$ level and (2) feeding the $|2P_{1/2},1]$ level. Thus, the relative number of $2P_{1/2} \rightarrow 1S_{1/2}$ radiative transitions is enhanced, since the nuclear lifetimes are of the order of 10^{-8} sec, whereas these transitions occur in approximately 10^{-18} sec.[3] The energies of the true eigenstates are displaced from those calculated for the unmixed levels, but the resulting transition lines, of non-negligible intensity, are shifted by amounts less than or equal to $\frac{1}{3}$ of the $2P$ fine-structure splitting (See Figs. 2 and 3). Since the experiment did not resolve the fine structure lines (except by assuming two lines were present and matching the spectrum with an assumed line shape), the energy shifts of the true eigenlevels could not be detected. The observed values of the "$2P_{3/2} \rightarrow 1S_{1/2}$ energy" and the "fine-structure splitting" can be calculated, once one has a means of averaging the predicted spectrum into two lines.

In Tl, assuming the resonance to be the cause of the discrepancy of the measured $W(2P \rightarrow 1S)$ from the expected value, we will predict the off-diagonal matrix elements (O) and the difference between the diagonal elements (b) of the Hamiltonian. The energy difference between the unperturbed $|2P_{3/2},0]$ level and the $|1S_{1/2},0]$ level (c) will also be predicted from the experimentally measured quantities. The quantities b and c will be shown to agree with the theoretically calculated values (Ford and Wills as reported in Ref. 1, Table II), the former agreeing within one standard deviation, the latter within 1.2 standard deviations. The off-diagonal elements will be reduced to one parameter. An argument of "better-than-order-of-magnitude" validity shall provide upper and lower limits for this parameter (O_1 of Table II); the lower limit is expected to be closer to the correct value. The value required by the experiment will be seen to miss agreement with the lower limit by two standard deviations. This, in itself, would not be very poor agreement, but the presence of some other effect is evident in Bi. The energy of the first excited nuclear level of Bi is roughly five times the fine-structure splitting, and a shell-model calculation has shown this effect to be negligible for this atom.

The possible causes of the observed discrepancies which have been considered are: (a) The effect of the radiative width of the levels on the diagonalization, which has been shown to be negligible. (The width is less than 1.2 keV which is to be compared with 17 keV energies Tl.) (b) The magnetic multipole interactions, which are negligible since the magnetic dipole interaction is smaller than the electric quadrupole interaction by a factor of 10^2, making it negligible in comparison to the radiation width. Furthermore, to first approximation, it cannot change the spin of the nucleus. (c) Nonresonant electric hyperfine mixing of states, which will be shown to have no effect on the relative transition rates. (d) A nuclear Auger effect with nonradiative $2P_J \rightarrow 1S$ transitions, which is energetically possible in Bi, but will be shown to have no effect upon the relative number of radiative $2P_J \rightarrow 1S$ transitions. [See the Appendix for the treatment of (c) and (d) above.]

The effect which causes Bi to have $W(2P \rightarrow 1S)$ equal to 0.75 ± 0.05 may be acting in the Tl atom, since the former is one proton above and the latter is one proton below a major closed shell. We would expect Pb to behave normally since it is a major closed shell nucleus (82 protons). This is indeed the case as the experiment has shown that $W(2P \rightarrow 1S) = 0.49 \pm 0.07$ for Pb which agrees with the theoretical expectation. If we assume that in thallium, $W(2P \rightarrow 1S) = 0.75$ before we take the resonance into account, then the observed value for $W(2P \rightarrow 1S)$ requires an off-diagonal element which agrees with the theoretical expectation. (The predicted values of b and c are not significantly changed.)

II. GENERAL THEORY

When the muonic atom is treated as a hydrogen-like problem with Bohr-type orbits about an extended spherical nucleus,[2,4] the Coulomb interaction between the muon and the protons of the nucleus is assumed to be of the form $(-e\int \rho(r')/|\mathbf{r}-\mathbf{r}'|d^3r')$, where $\mathbf{r}'$ is the nuclear position and $\mathbf{r}$ is the muon position. The nuclear charge distribution $\rho(r')$ has been assumed to be spherically symmetric. By the usual expansion of $(|\mathbf{r}-\mathbf{r}'|)^{-1}$ in multipoles, we have (after doing the angular integration)

$$V(\mathbf{r}) = -e\int dr'[r']^2\rho(r')[r_g]^{-1} = V(r), \qquad (1)$$

where r_g is the greater of r and r'. If $\rho(r')$ is zero when $r' > R$, then for $r > R$ we have $V(r) = (-Ze^2/r)$, as expected. [The $V(r)$ for $r < R$ may be calculated using Eq. (1).] The true interaction, $H_c = \sum_i(-e^2/|\mathbf{r}-\mathbf{r}_i'|)$, i running from 1 to Z (where $\mathbf{r}_i'$ is the position of the ith proton and $\mathbf{r}$ is the muon position), essentially has been averaged over the nuclear state. One defines this average as $V(\mathbf{r})$ with $\langle\psi_N|H_c|\psi_N\rangle = V(\mathbf{r})$, which is assumed to be only a function of radial distance.[4] The difference between this and the true interaction must be treated as a perturbation, mixing the eigenstates of the average

[2] V. L. Fitch and J. Rainwater, Phys. Rev. **92**, 789 (1953).

[3] B. A. Jacobsohn, Phys. Rev. **96**, 1637 (1954). The factor 2.3 for the point quadrupole nucleus has been calculated for $Z=82$ and $R=1.2\times10^{-13}A^{1/3}$ cm by the present author.

[4] L. N. Cooper and E. M. Henley, Phys. Rev. **92**, 801 (1953).

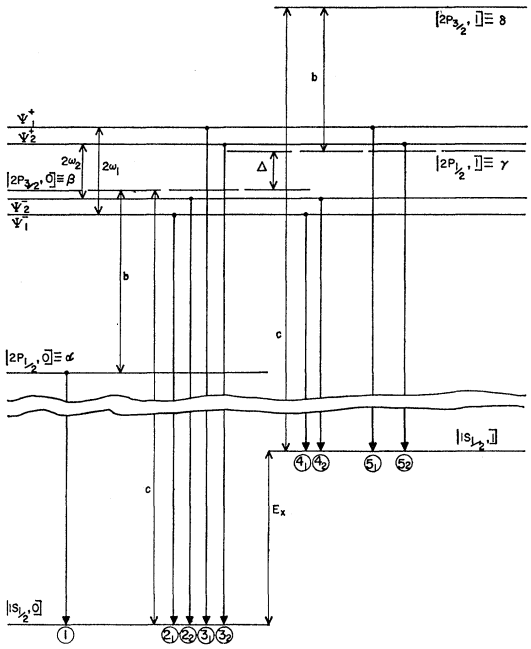

FIG. 1. Tl level scheme. This figure is not drawn to scale. The levels β and γ, indicated by dashed lines, are eigenlevels of the unperturbed (hydrogen-like) Hamiltonian. The true eigenlevels are designated $\Psi_F^{\pm}$ as discussed in the text. In the symbols $|nL_J,N]$, the first symbols refer to the usual muon quantum numbers; when N is zero the nucleus is in its ground state ($S_{1/2}$) and when N is the one the nucleus is in its first excited stated ($D_{3/2}$). The $2P\rightarrow 1S$ transition lines are labelled with numbers referring to the lines of Table I, the subscripts of which are the F values of the corresponding initial energy levels. It is easily seen from the figure that $\Delta=E_x-b$.

interaction. The perturbation, $H'=\sum_i(-e^2/|\mathbf{r}-\mathbf{r}_i'|)-V(r)$, can be expanded in multipoles in the usual way[4] [only the zeroth multipole is altered by the $V(r)$]. Using the standard techniques of algebra,[5] it can be shown that

$$\begin{aligned}\langle\Psi|H_l'|\Psi'\rangle=&(-)^{F+l+I-1/2}\\&\times[(2J+1)(2J'+1)(2L+1)(2L'+1)]^{1/2}\\&\times\begin{Bmatrix}J & J' & l\\ L' & L & \frac{1}{2}\end{Bmatrix}\begin{Bmatrix}F & J & I\\ l & I' & J'\end{Bmatrix}\begin{Bmatrix}L & l & L'\\ 0 & 0 & 0\end{Bmatrix}\\&\times\kappa_l(I,I')\delta_{FF'}\delta_{M_FM_F'},\end{aligned}\tag{2}$$

where l is the multipole, in the expansion of H', being considered. Here we have used the usual spectroscopic notation, L and J referring to muon quantum numbers, I to the nuclear angular momentum, F and M_F to the total angular momentum of the atom and its z component, respectively, for the state Ψ; similarly the primed letters refer to the state Ψ'. The κ's are the reduced nuclear matrix elements times the radial integrals, and will be discussed later. The 3-j and 6-j symbols are defined by Edmonds.[5] These matrix elements are independent of M_F, and, therefore, this interaction cannot remove the M_F degeneracy. Note that these matrix elements are diagonal in F and M_F as expected for an interaction which is an over-all scalar.

We now make the following definition:

$$O_F=\sum_l\langle\Psi_F|H_l'|\Psi_F'\rangle\quad\text{when}\quad I\neq I'.\tag{3}$$

From Eq. (2), we see that

$$O_F=\sum_l C_l\begin{Bmatrix}F & J & I\\ l & I' & J'\end{Bmatrix},\tag{3'}$$

where the constants (C_l) are independent of F. For the muon states $2P_{3/2}$ and $2P_{1/2}$, only the term with $l=2$ is nonzero in O_F; for $l>2$ we have zero because l cannot connect a state which has $L=1$ with another whose L is one (or a $J=\frac{3}{2}$ with a $J=\frac{1}{2}$ state), for $l=1$ parity conservation gives zero, and for $l=0$ we have zero because we cannot connect a state of $J=\frac{3}{2}$ with one of $J=\frac{1}{2}$ $\left[\text{i.e., we have for } l>2 \text{ or } l=0,\ \begin{Bmatrix}\frac{3}{2} & \frac{1}{2} & l\\ 1 & 1 & \frac{1}{2}\end{Bmatrix}=0 \text{ and for } l=1,\ \begin{pmatrix}1 & l & 1\\ 0 & 0 & 0\end{pmatrix}=0 \text{ in Eq. (2)}\right]$.

For Tl, the amount of mixing between the $|2P_{3/2},N]$ and the $|2P_{1/2},N]$, the $|2P_{3/2},1]$ and the $|2P_J,0]$, or the $|2P_{J'},0]$ and the $|2P_{J'},1]$ levels is negligible. This is true because their energy spread (the difference of their diagonal matrix elements of the Hamiltonian) is larger than the off-diagonal matrix elements connecting them, by a factor greater than 10. Thus, only the $|2P_{3/2},0]$ and the $|2P_{1/2},1]$ states of the same F and M_F can be mixed, and the Hamiltonian may be factored into a set of unconnected two by two matrices. By the usual treatment of states whose off-diagonal elements are not small in comparison to their energy separation, we have

$$\begin{aligned}\Psi_F^+&=(1-a_F^2)^{1/2}\Psi^{\beta}{}_F+a_F\Psi^{\gamma}{}_F,\\ \Psi_F^-&=a_F\Psi^{\beta}{}_F-(1-a_F^2)^{1/2}\Psi^{\gamma}{}_F,\\ E_F^{\pm}&=E_\beta+\tfrac{1}{2}\Delta_F\pm\tfrac{1}{2}(\Delta_F^2+4O_F^2)^{1/2},\end{aligned}\tag{4}$$

for the true eigenstates and their eigenvalues, where

$$\begin{aligned}a_F^2=&[\tfrac{1}{2}\Delta_F+\tfrac{1}{2}(\Delta_F^2+4O_F^2)^{1/2}]^2\\&\times[\{\tfrac{1}{2}\Delta_F+\tfrac{1}{2}(\Delta_F^2+4O_F^2)^{1/2}\}^2+O_F^2]^{-1}.\end{aligned}\tag{4'}$$

The symbols β_F and γ_F represent the states $|2P_{3/2},0]_F$ and $|2P_{1/2},1]_F$, respectively (See Fig. 1); the differences of the diagonal terms of the Hamiltonian matrix have been represented by Δ_F ($\Delta_F=\langle\gamma_F|H|\gamma_F\rangle-\langle\beta_F|H|\beta_F\rangle$) and O_F is the off-diagonal matrix element defined in Eq. (3). Note that the quantity $(1-a_F^2)$ is a measure of the amount of mixing occurring. The M_F degeneracy has not been removed, and so Eq. (4) holds for each M_F substate of the wave functions, with no mixing of states of different M_F. For convenience, we define

$$y_F^2=4(O_F/\Delta_F)^2+1,\tag{4''}$$

[5] A. Edmonds, *Angular Momentum in Quantum Mechanics* (Princeton University Press, Princeton, New Jersey, 1957). See Ref. 9 for tables of the 3-j and 6-j symbols.

which yields

$$a_F^2 = (1+y_F)(2y_F)^{-1},$$

and

$$E_F^{\pm} = E_\beta + \tfrac{1}{2}\Delta_F \pm \omega_F, \quad \text{with} \quad \omega_F = \tfrac{1}{2}\Delta_F y_F.$$

For the usual electric dipole transition from a statistically populated state Ψ' to a state Ψ, with the same nuclear angular momentum ($I=I'$), we have

$$\begin{aligned}\Phi &\propto \nu^3 \textstyle\sum_{i,M_F,M_{F'}} |\langle \Psi | rC^{(1)}{}_i | \Psi' \rangle|^2 \\ &= \nu^3 |r_{nL,n'L'}|^2 (2F+1)(2F'+1) \\ &\quad \times (2J+1)(2J'+1)(2L+1)(2L'+1) \\ &\quad \times \left| \begin{pmatrix} L & 1 & L' \\ 0 & 0 & 0 \end{pmatrix} \begin{Bmatrix} J & J' & 1 \\ L' & L & \frac{1}{2} \end{Bmatrix} \begin{Bmatrix} F & 1 & F' \\ J' & I & J \end{Bmatrix} \right|^2 \end{aligned} \tag{5}$$

for the transition probability per unit time (Φ); where ν is the frequency of transition; r is a radial integral; the n, L, J, and F are the usual quantum numbers (as discussed before) for Ψ; similarly the primed symbols are those quantum numbers for Ψ'. The 3-j and 6-j symbols are defined in Edmonds[5]; the proportionality constant is a universal constant. If the ν dependence is neglected, we may sum over F' and J' (of the initial level) to derive the sum rules

$$\textstyle\sum_{F',J'} \Phi \propto C(2F+1), \tag{5'}$$

for the total intensity to a given level, from a set of levels of definite n' and L'. Here C is independent of J and I (as long as the level may be reached from the upper levels and $I=I'$).

If the nucleus is in its ground state when the muon is in any of the higher shells, the muon transition to the $2P$ levels will populate each in proportion to the absolute square of the coefficient of its component with the nucleus in the ground state. From the sum rules [Eq. (5′)] and Eq. (4), we see that the relative populations of $\Psi_F^{\pm}$ may be written:

$$\begin{aligned} &\text{Population of } \Psi_F^+ \propto (2F+1)(1-a_F^2), \\ &\text{Population of } \Psi_F^- \propto (2F+1)a_F^2. \end{aligned} \tag{6}$$

These must be corrected for the ν dependence of Φ, as will be discussed below.

If one sums Eq. (5) over F, assuming ν to be independent of F (the final level's total angular momentum) we have:

$$\begin{aligned}\sum_F \Phi &\propto \nu^3 (2F'+1)(2J+1)(2L'+1)(2L+1) \\ &\quad \times \left| \begin{pmatrix} L & 1 & L' \\ 0 & 0 & 0 \end{pmatrix} \begin{Bmatrix} J & J' & 1 \\ L' & L & \frac{1}{2} \end{Bmatrix} \right|^2. \end{aligned} \tag{7}$$

{Note that if we sum Eq. (7) over F', assuming ν^3 independent of F', we find that ($\sum_{FF'}\Phi$) is equal to $(2I+1)$ times the result obtained when the nucleus is ignored [since $\sum_{F'}(2F'+1)=(2I+1)(2J'+1)$].} For the $2P \rightarrow 1S$ transition, ν is independent of F and we have $J=\frac{1}{2}$, $L=0$, $L'=1$, $J'=\frac{1}{2}$ or $\frac{3}{2}$, $n=1$, and $n'=2$; the absolute square of the 6-j symbol in Eq. (7) has the same numerical value for each value of J'. Therefore, we may write

$$\textstyle\sum_F \Phi \propto (2F'+1)\nu^3 \tag{7'}$$

for the $2P \rightarrow 1S$ transition. The proportionality constant is independent of J' and I (for transitions with $I=I'$).

In the derivations of Eqs. (5) and (7), we have assumed the initial levels to have definite values of J' and $I'=I$. If the initial state is a mixture of states, the right-hand side of each of these equations must be multiplied by the absolute square of the coefficient of the component of the initial state with $I'=I$, and the primed quantum numbers are to be taken as those of this component. We have also summed over M_F', which assumes the relative population of each initial F' level is equal to $(2F'+1)$. In general, the intensity of a line from a mixed level is proportional to the product of the absolute square of the matrix element for the transition and the relative population of the initial level. For our $2P \rightarrow 1S$ transitions we have

$$\text{Intensity} = f_i \Phi_i, \tag{7''}$$

where the index i refers to the lines shown in Fig. 1. The Φ_i are defined in Eq. (7′) and the f_i (for each i) is the product of the absolute square of the coefficient of the component of the initial level whose I' is equal to I, and the *actual* relative population of the initial level divided by $(2F'+1)$. [In Jacobsohn's[6] notation we have $f_i = p(I,\nu,F')\cdot p(I_0,\nu,F')$.]

III. FREQUENCY DEPENDENCE OF THE TRANSITION RATES

If a meson has only one mode of radiative decay, the relative number of such events (which is actually what has been measured) is not changed by the ν dependence; only the rate is changed. However, if there are two competing modes of radiative decay from a given level, we must take this ν dependence into account.

$$\frac{A_1}{A_2} = \frac{S_1}{S_2}\left(\frac{\nu_1}{\nu_2}\right)^3, \tag{8}$$

where A_i is the actual number decaying through mode i, S_i is the number assigned by the sum rules [Eq. (5′)] to the decay through mode i, and ν_i is the corresponding frequency of transition. If we demand that the total number of particles being discussed remain the same, then $\sum_i A_i = \sum_i S_i$, and we can write $A_1 = S_1 + \epsilon$ and $A_2 = S_2 - \epsilon$, with $\epsilon > 0$ if $\nu_1 > \nu_2$. Thus, we may write

$$\frac{S_1+\epsilon}{S_2-\epsilon} = \frac{S_1}{S_2}\left(\frac{\nu_1}{\nu_2}\right)^3. \tag{8'}$$

If we look at the mechanism which feeds the $\Psi_F^{\pm}$

[6] See Ref. 3, Eqs. (16) to (18), his J is our F and his j is our J.

levels, we see that we must change Eq. (6) so that the populations are

$$(2F+1)(1-a_F^2-\delta_F) \quad \text{for} \quad \Psi_F^+$$

and (6′)

$$(2F+1)(a_F^2+\delta_F) \quad \text{for} \quad \Psi_F^-,$$

where we have replaced the corrections denoted by ϵ in Eq. (8′) by $(2F+1)\delta_F$.

If we assume the level is fed from an $n=3$ level, we get the upper limits of δ_F. Applying Eq. (8′) to this case we have

$$(1-a_F^2-\delta_F)/(a_F^2+\delta_F) = (1-a_F^2)[(\nu^+)_F]^3/(a_F^2)[(\nu^-)_F]^3, \quad (9)$$

where $(\nu^\pm)_F$ are the energies of transition from the $3D$ level to $\Psi_F^\pm$, respectively.

Now from Eqs. (6′), (4), and (7′) we see that

$$\begin{aligned}(f_2)_F&=a_F^2(a_F^2+\delta_F),\\ (f_3)_F&=(1-a_F^2)(1-a_F^2-\delta_F),\\ (f_4)_F&=(1-a_F^2)(a_F^2+\delta_F),\\ (f_5)_F&=a_F^2(1-a_F^2-\delta_F),\end{aligned} \quad (10)$$

and $S_i=(2F+1)f_i$ for the lines designated in Fig. 1.

We can also calculate the relative number of muons fed into the $|2P_{1/2},0]$ state from the $|3D,0]$ levels $\{W(3D\rightarrow 2P)\}$. If there are initially 15 muons in the $3D$ levels, and we assume a statistical distribution, then there will be 9 in the $3D_{5/2}$ level and 6 in the $3D_{3/2}$ level. The 9 are all fed to the $|2P_{3/2},0]$ level, in an electric dipole transition. The 6 can go into the $2P_{3/2}$ or $2P_{1/2}$ level; the number assigned to the $2P_{3/2}$ level by the sum rules is 1. [Thus, the sum rules result in 10 muons being fed to the $2P_{3/2}$ and 5 to the $2P_{1/2}$ level, giving $W(3D\rightarrow 2P)=\frac{1}{2}$.] We must demand, however, that Eq. (8′) be employed, using $S_1=5$, $S_2=1$, $\nu(3D_{3/2}\rightarrow 2P_{3/2})=\nu_2$, and $\nu(3D_{3/2}\rightarrow 2P_{1/2})=\nu_1$. From the experiment and experimentally determined value for b, we have: $h\nu_1=2.605$ MeV and $h\nu_2=2.417$ MeV. This results in the value of ϵ being 0.1735 which yields $W(3D\rightarrow 2P)=(5+\epsilon)(9+1-\epsilon)^{-1}=0.5265$. This value of $W(3D\rightarrow 2P)$ agrees with that observed[1] for Tl (0.53 ± 0.03) and for Pb (0.51 ± 0.02). (The Bi^{209} result (0.59 ± 0.02) is already explained by a capture γ ray, in Ref. 1.) If this effect had occurred in the feeding of the $3D$ level, $W(3D\rightarrow 2P)$ would be even greater.

Since $\Psi_F^\pm$ each have two different modes of decay, we can apply Eq. (8′) using Eq. (10) and get

$$\begin{aligned}&\{(2F+1)a_F^2(a_F^2+\delta_F)+\epsilon_F^-\}\\ &\qquad\times\{(2F+1)(1-a_F^2)(a_F^2+\delta_F)-\epsilon_F^-\}^{-1}\\ &=\{(2F+1)a_F^2(a_F^2+\delta_F)(\nu_2)_F^3\}\\ &\qquad\times\{(2F+1)(1-a_F^2)(a_F^2+\delta_F)(\nu_4)_F^3\}^{-1},\end{aligned}$$

and (11)

$$\begin{aligned}&\{(2F+1)(1-a_F^2)(1-a_F^2-\delta_F)+\epsilon_F^+\}\\ &\qquad\times\{(2F+1)a_F^2(1-a_F^2-\delta_F)-\epsilon_F^+\}^{-1}\\ &=\{(2F+1)(1-a_F^2)(1-a_F^2-\delta_F)(\nu_3)_F^3\}\\ &\qquad\times\{(2F+1)a_F^2(1-a_F^2-\delta_F)(\nu_5)_F^3\}^{-1},\end{aligned}$$

for the lines of Fig. 1. The δ_F were defined in Eqs. (6′) and (9) and the $\epsilon_F^\pm$ are defined by Eq. (11).

The average intensity of a composite line will be assumed to be the sum of the intensities of its components; the energy of transition will be the average energy of its components, each weighted by its relative intensity. From Figs. 1 and 2 we see that line I is made up of lines 1, 4, and 5 and line II is made up of lines 2 and 3.

Thus, we have

$$\begin{aligned}A_{\mathrm{I}}=&(2I_0+1)(2J_\alpha+1)(U/\tfrac{1}{2})\\ &+\textstyle\sum_{F^-}[(f_4)_F(2F+1)-\epsilon_F^-]\\ &+\textstyle\sum_{F^+}[(f_5)_F(2F+1)-\epsilon_F^+]\end{aligned}$$

and (12)

$$\begin{aligned}A_{\mathrm{II}}=&\textstyle\sum_{F^-}[(f_2)_F(2F+1)+\epsilon_F^-]\\ &+\textstyle\sum_{F^+}[(f_3)_F(2F+1)+\epsilon_F^+].\end{aligned}$$

Here $(2I_0+1)(2J_\alpha+1)$ is the multiplicity of level α (see Fig. 1), U is the relative number of muons making radiative transitions from α to $|1S_{1/2},0]$ (compared to the total number making these radiative transitions from $\Psi_F^\pm$ to $|1S_{1/2},0$ or $1]$), and we have divided by that value $\frac{1}{2}$ assumed by the sum rules. In the absence of a resonance, $W(2P\rightarrow 1S)$ would be U. If we assume that the $2P$ level was populated by random processes and the muons all made radiative transitions to the $1S$ level, then we expect to have a statistical distribution with $U=\frac{1}{2}$. If we assume that the muons reach the $2P$ level after a radiative cascade, the distribution is slightly different than the statistical one. The ν dependence will always cause more feeding of the lower J level (of a given n and L) than the sum rules predict. This imbalance will be propagated to the ($n=1$, $L=1$) level, since most of the transitions are from states of ($L'=n'-1$) to states of ($L=n-1$), which have the greatest multiplicities in their respective shells. The impoverished upper J level feeds the next state's upper J level (via electric dipole transitions) which is, therefore, further impoverished. Thus, a radiative cascade implies that $U\approx W(3D\rightarrow 2P)$, and this will be denoted by "Case I."

IV. THE NUCLEUS AND THE OFF-DIAGONAL MATRIX ELEMENTS OF THE HAMILTONIAN

The radial integral times the reduced nuclear matrix element, denoted by $\kappa_l(I,I')$ in Eq. (2), can be related to the reduced transition probability for exciting the nucleus from a state whose spin is I to one of I'. We have shown that only $l=2$ in Eq. (2) gives nonzero for the $2P$ states under consideration, and therefore, we are speaking of the quadrupole reduced transition probability, $B_x(E_2)$, as defined by Jacobsohn.[3] Following the arguments of Wheeler,[7] Wilets,[8] and Jacobsohn,[3] we assume the quadrupole distribution of the nucleus to

[7] J. A. Wheeler, Phys. Rev. **92**, 812 (1953).
[8] L. Wilets, Kgl. Danske Videnskab. Selskab, Mat. Fys. Medd. **29**, No. 3, 9 (1954), Eq. (14).

be localized on its surface (Rainwater model). The sensitivity of the calculation to this assumption is shown to be small for a $2P$ muon, since only where the muon wave function is to be evaluated inside the nucleus is the distribution of the quadrupole moment involved. [Assuming the quadrupole distribution to be concentrated at the center increases the result by a factor of only 2.3.[3]] Using this as a "better-than-order-of-magnitude" estimate we can determine upper and lower limits for $|O_F|$. In a manner similar to Jacobsohn's[3,9] treatment we find:

$$|\kappa_2(I,I')| = |[(B_x[E_2]/e^2)(4\pi/5)(2I_0+1)]^{1/2} \times \langle R_{nL}|g_2|R_{nL}\rangle| , \quad (13)$$

with $g_2 = -(e^2/r^3)P(I,I')$, where the $|R_{nL}\rangle$ are the muon radial functions and a radial integral is to be done; $P(I,I')$ is the penetration factor.[3,7] Of course P is one for $r>R$ [see Eq. (1)] and P is equal to $(r/R)^5$ when r is less than R, for the Rainwater model[3,7] described above. It has been shown,[7] using Coulomb wave functions, that

$$\bar{g}_2 \equiv \langle R_{2P}|g_2|R_{2P}\rangle = 5(Z/237)^3 f_q \text{ MeV/b} , \quad (14)$$

where $f_q = (1+0.1x^2)^{-2}$ and $x = RZ\mu e^2\hbar^{-2}$; R is the "nuclear radius" and μ is the muon's mass. This is expected to be poor for high-Z elements but was only 6% higher than the results obtained from the Fitch and Rainwater wave functions for Pb^{208}.[8]

V. NATURAL SAMPLES[10]

A. Bismuth

Natural Bi is 100% Bi^{209}. The coupling of the one extra proton with the surface of the double magic-number core is known to be small. This conclusion may be drawn from the fact that the measured quadrupole moment is of the order of the single particle value, and much smaller than that expected for the hydrodynamic model.[11] A shell-model calculation shows that the off-diagonal matrix elements from the ground $\frac{9}{2}^-$ to the first excited $\frac{7}{2}^-$ state are less than 3 keV. The first excited level is 900 keV above ground and, therefore, $\Delta_F = E_x - b \approx 700$ keV. Thus, the perturbation treatment of the Appendix includes this state and no resonance is involved. Excitation of the core is seen to require more than 2.6 MeV (the first excited state of Pb^{208}, which is a 3^-, and cannot be reached by even multipole interactions). Even if O were a factor of 10 times the shell-model off-diagonal elements, the perturbation treatment still would apply. Note that Δ is much greater than b. Therefore, the mixing of the $|2P_{3/2},1]$ into the $|2P_{1/2},0]$ state would almost cancel the effect of the β, γ mixing upon $W(2P \rightarrow 1S)$, even when perturbation theory is not valid.

B. Lead

Natural lead is made up of 52.3% Pb^{208}, 22.6% Pb^{207}, 23.6% Pb^{206}, and 1.5% Pb^{204}. No excited state of the Pb^{208} nucleus has been found which can be connected to the ground state by our quadrupole interaction. Thus, Δ_F is larger than 4 MeV and no resonance is expected.

In Pb^{207} there are two low-lying excited states which can be connected to the ground state $\frac{1}{2}^-$ by the interaction. The $\frac{3}{2}^-$ level, at 0.894 MeV above ground, is adequately treated by perturbation theory. This may be concluded by comparison with Bi^{209}. A similar level in that nucleus has been shown to be amenable to a perturbation theory treatment. In the Pb^{207} nucleus, the extra-core particle is a neutron hole, and the interaction is now due to the recoil of the core protons. Therefore, the effect should *not* be appreciably *larger*. Upon examination of the observed reduced transition probability for exciting the $\frac{5}{2}^-$, 0.570-MeV level we find $B_x(E_2) = 0.028\times10^{-48}$ cm^4. Only the $F=2$ level is mixed here, i.e., $|2P_{3/2}; I=\frac{1}{2}]$ and $|2P_{1/2}; I=\frac{5}{2}]$ have only $F=2$ in common. From Eqs. (2), (3), and (13) we have[5,9] $|O_2| = (2[5]^{1/2}/25)\ \kappa(I,I') \approx 6.0$ keV. Thus, we find that $4(O_2/\Delta_2)^2 \approx 10^{-3}$, and this state is included in our perturbation treatment.

In Pb^{206} the first excited state is a 2^+ at 0.803 MeV above the ground state, 0^+. Using the value $B_x(E_2) = 0.11\times10^{-48}$ cm^4, and the fact that only the $F=\frac{3}{2}$ state is mixed, we find: $|O_{3/2}| \approx 9.4$ keV, and $4(O_{3/2}/\Delta)^2 \approx 10^{-3}$. Indeed, the perturbation theory is valid.

In Pb^{204} the first excited state is a 2^+ at 0.899 MeV above the ground state, 0^+. This is very much like the Pb^{206} situation. Even if its $B_x(E_2)$ were a factor of 10 greater, the effect would still remain within the realm of perturbation theory. Since only 1.5% of our sample was this isotope, even an anomalous B_x would have little effect on the experimental results.

The "sum effect" (See Appendix) thus includes all the states of our Pb sample, and our Bi sample as well [cf. subsection (A)].

C. Natural Thallium

Natural Tl is made up of 29.5% Tl^{203} and 70.5% Tl^{205}. The ground states of both these isotopes are $\frac{1}{2}^+$ levels.

In Tl^{203}, the known low-lying excited states are a $\frac{3}{2}^+$ at 0.279 MeV and a $\frac{5}{2}^+$ at 0.679 MeV above ground. The second excited state has $B_x(E_2) = 0.210\times10^{-48}$ cm^4. We find only $F=2$ states in common with the ground states (as in Pb^{207}). It is easily seen, using $\bar{g}_2 \approx 8.9\times10^{-2}$ MeV/b, that $|O_2|$ is about 12 keV. Since Δ is approximately 490 keV, the perturbation treatment is valid. The energy of the first excited state is close enough to the fine-structure splitting to warrant a more exact treatment.

[9] M. Rotenberg *et al.*, *The 3-j and 6-j Symbols* (Technology Press, Cambridge, Massachusetts, 1959).

[10] All experimental numbers are taken from *Nuclear Data Sheets*, compiled by K. Way *et al.* (Printing and Publishing Office, National Academy of Sciences–National Research Council, Washington 25, D. C.), and the references quoted therein.

[11] A. Bohr and B. R. Mottleson, Kgl. Danske Videnskab. Selskab, Mat. Fys. Medd. **27**, No. 16 (1953).

In Tl^{205}, the excited levels have the same spin and parity assignments as the corresponding Tl^{203} levels, but their energies are 0.205 and 0.615 MeV, respectively. The second excited state has $B_x(E_2)=0.114\times10^{-48}\,\mathrm{cm}^4$, yielding $|O_2|\approx16$ keV. Again the perturbation treatment is valid!

The first excited level (in both isotopes) may be considered to be in resonance with the ground level, since Δ is of the order of the off-diagonal elements.

The ground level of the nucleus is an $S_{1/2}$ state and the first excited level is a $D_{3/2}$ state. (These are shell-model assignments; the I's have been measured.) It is easy to see that $\langle\beta|H_l'|\beta\rangle=0=\langle\gamma|H_l'|\gamma\rangle$ for $l\neq0$: Since an S state has no multipole moments, the first equality holds; since a $2P_{1/2}$ state can have nonzero expectation value only for operators whose $l<2$ $\left[\text{as seen from Eq. (2), } \begin{Bmatrix} \frac{1}{2} & \frac{1}{2} & l \\ L & L & \frac{1}{2} \end{Bmatrix}=0 \text{ for } l\geq2\right]$ and, if parity is to be conserved, an $l=1$ operator has zero expectation value in this level $\left[\text{in Eq. (2) we have } \begin{pmatrix} 1 & 1 & 1 \\ 0 & 0 & 0 \end{pmatrix}=0\right]$ the second equality holds. Only the spherically symmetric part of the Hamiltonian has nonzero diagonal matrix elements and these are the originally calculated energies, which are independent of F. (The corrections, due to errors in the nuclear charge distribution used, are attenuated by the smallness of the $2P$ wave functions inside the nucleus.) Therefore, we have $\Delta_F=\Delta=E_x-b$ for thallium, where E_x is the nuclear excitation energy, b is the originally calculated fine structure splitting, and Δ is independent of F.

For Tl we have $F_\beta=1, 2$ and $F_\gamma=1, 2$, therefore, there is mixing in the states $F_\beta=1=F_\gamma$ and $F_\beta=2=F_\gamma$. From Eq. (3′) we see that

$$5|O_2|=|O_1|\,. \tag{15}$$

From Eqs. (15) and (4″) we see that

$$25(y_2^2-1)=y_1^2-1\,, \tag{15′}$$

so that only one parameter (y_1) is free.

From Eqs. (2) and (3) it follows that

$$|O_1|=(2\sqrt{5})^{-1}|\kappa(I,I')| \\ =(1/5)|(2\pi B_x(E_2)/e^2)^{1/2}\langle R_{nL}|g_2|R_{nL}\rangle|\,. \tag{16}$$

Using Eq. (14), with $R=1.2\times10^{-13}A^{1/3}$ cm, we find

$$\bar{g}_2=8.827\times10^{-2}\ \mathrm{MeV/b}\quad\text{for } Tl^{205}$$

and

$$\bar{g}_2=8.862\times10^{-2}\ \mathrm{MeV/b}\quad\text{for } Tl^{203}.$$

Recent measurements,[12] by Coulomb excitation of the nucleus, yield

$$B_x(E_2)=e^2(0.100\pm0.010)\times10^{-48}\,\mathrm{cm}^4\quad\text{for } Tl^{205}$$

and

$$B_x(E_2)=e^2(0.124\pm0.014)\times10^{-48}\,\mathrm{cm}^4\quad\text{for } Tl^{203}.$$

[12] F. K. McGowan and P. H. Stelson, Phys. Rev. **109**, 901 (1958), and private communication.

Thus, Eq. (16) yields

$$|O_1|=(14.0\pm1.4)\ \mathrm{keV}\quad\text{for } Tl^{205}$$

and

$$|O_1|=(15.6\pm0.9)\ \mathrm{keV}\quad\text{for } Tl^{203}.$$

Natural thallium is made up of 29.5% Tl^{203} and 70.5% Tl^{205}, therefore,

$$W(2P\rightarrow1S)=[2.95A_{\mathrm{I}}(203)+7.05A_{\mathrm{I}}(205)] \\ \times[2.95A_{\mathrm{II}}(203)+7.05A_{\mathrm{II}}(205)]^{-1} \tag{12″}$$

for natural thallium, where $A_\rho(T)$ is defined in Eq. (12), with T referring to the atomic weight of the isotope being considered. In the treatment of Tl^{203} we have $\Delta\approx90$ keV and, since $|O_1|$ is approximately 16 keV, the parameter $y_1^2(203)$ is approximately 1.13 and is not sensitive to small changes of $|O_1|$. Since our sample was only 29.5% Tl^{203}, the sensitivity of our results to slight variations in $y_1^2(203)$ is negligible. For Tl^{205} we must be more precise, since $|O_1|\approx\Delta$. In order to achieve agree-

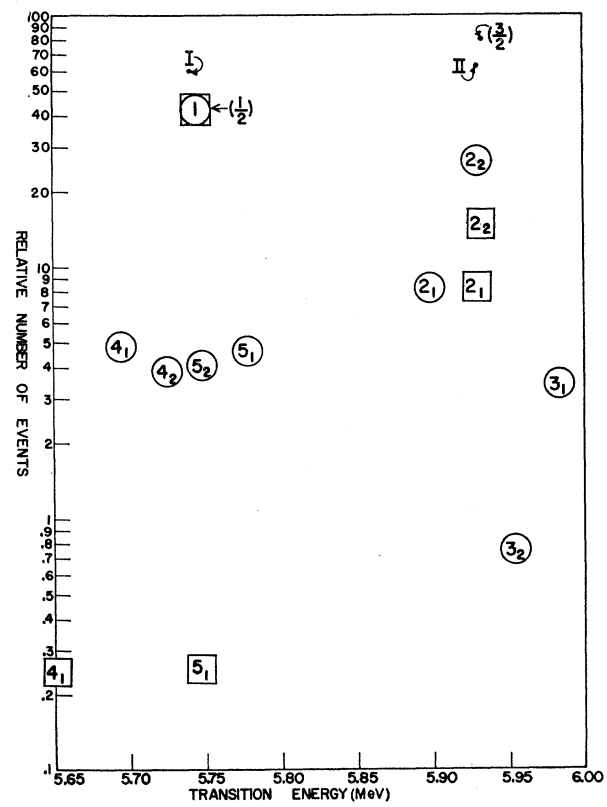

FIG. 2. Spectrum $2P\rightarrow1S$ for natural thallium. Case I: $U=W(3D\rightarrow2P)$. The circles are for transitions in Tl^{205} and the squares are for those in Tl^{203}; the subscripts are F values. A circle and a square superimposed means the sum of the lines in both isotopes is being plotted. If we had assumed no mixing, we would have the lines indicated as (J) where J is the angular momentum of the initial $2P$ level. From Fig. 1 it can be seen that: $E(\frac{1}{2})=E_1$ and $E(\frac{3}{2})=c$. Lines I and II are the composite lines (averages of the true spectral lines).

The numbers are from Table I and there is an uncertainty of ±0.011 MeV in the absolute scale.

The total number of muons is $80(1+U)$.

TABLE I. Spectrum of $2P-1S$ transitions for natural thallium $W(2P \rightarrow 1S)=0.97\pm0.09$.

Line	F Initial	Isotope	Relative No. of events[a,b] (Formula) (A)	Energy[a,c] (Formula) (E)	Case I[d]: $U=W(3D\rightarrow 2P)=0.5265$ A	E(MeV)[e]	Case II[d]: $U=0.75$ A	E(MeV)[e]
2	1	205	$[3a_1^2(a_1^2+\delta_1)+\epsilon_1^-][7.05]$	$c+\frac{1}{2}\Delta(1-y_1)$	8.21	5.899	12.93	5.925
2	2	205	$[5a_2^2(a_2^2+\delta_2)+\epsilon_2^-][7.05]$	$c+\frac{1}{2}\Delta(1-y_2)$	26.58	5.930	33.71	5.931
3	1	205	$[3(1-a_1^2)(1-a_1^2-\delta_1)+\epsilon_1^+][7.05]$	$c+\frac{1}{2}\Delta(1+y_1)$	3.42	5.984	1.18	5.956
3	2	205	$[5(1-a_2^2)(1-a_2^2-\delta_2)+\epsilon_2^+][7.05]$	$c+\frac{1}{2}\Delta(1+y_2)$	0.75	5.954	0.02	5.949
4	1	205	$[3(1-a_1^2)(a_1^2+\delta_1)-\epsilon_1^-][7.05]$	$c+\frac{1}{2}\Delta(1-y_1)-E_x$	4.87	5.694	3.53	5.720
4	2	205	$[5(1-a_2^2)(a_2^2+\delta_2)-\epsilon_2^-][7.05]$	$c+\frac{1}{2}\Delta(1-y_2)-E_x$	3.86	5.725	0.73	5.726
5	1	205	$[3a_1^2(1-a_1^2-\delta_1)-\epsilon_1^+][7.05]$	$c+\frac{1}{2}\Delta(1+y_1)-E_x$	4.66	5.779	3.51	5.751
5	2	205	$[5a_2^2(1-a_2^2-\delta_2)-\epsilon_2^+][7.05]$	$c+\frac{1}{2}\Delta(1+y_2)-E_x$	4.07	5.749	0.80	5.744
1	Total		$[4U/\frac{1}{2}][10]$	$c-b$	42.12	5.745	60.00	5.744
2	1	203	[same as corresponding line for 205][2.95]	···	8.34	5.930	8.34	5.929
2	2	203	[same as corresponding line for 205][2.95]	···	14.72	5.933	14.72	5.932
3	1	203	[same as corresponding line for 205][2.95]	···	0.01	6.026	0.01	6.025
3	2	203	[same as corresponding line for 205][2.95]	···	0.00	···	0.00	···
4	1	203	[same as corresponding line for 205][2.95]	···	0.25	5.651	0.25	5.650
4	2	203	[same as corresponding line for 205][2.95]	···	0.02	5.654	0.02	5.653
5	1	203	[same as corresponding line for 205][2.95]	···	0.25	5.747	0.25	5.746
5	2	203	[same as corresponding line for 205][2.95]	···	0.02	5.744	0.02	5.743
I	Composite		$\Sigma_{F,\text{ isotopes}}(A_1+[A_4]_F+[A_5]_F)$	weighted average[c]	60.1 ± 3.2	5.742	69.1 ± 3.7	5.743
II	Composite		$\Sigma_{F,\text{ isotopes}}([A_2]_F+[A_3]_F)$	weighted average[c]	62.0 ∓ 3.2	5.930	70.9 ∓ 3.7	5.930

[a] All symbols in columns four and five refer to Tl^{205}. The ϵ's and δ's are corrections due to the frequency dependence of the transition rates. Here Δ is the energy difference of the levels being mixed. The y_F are the energy shifts of the corresponding F levels from the center of gravity of two mixed levels, in units of $(\Delta/2)$. [Note that as Δ approaches zero, y_F approaches $(2|O_F|/\Delta)$; therefore, the energy shifts approach $(\pm|O_F|)$, where O_F is the off-diagonal matrix element of the Hamiltonian connecting the two states.] For Tl^{203} we have used $|O_1|\approx16$ keV and $\Delta\approx90$ keV, which gives $y_1^2=1.13$. We calculated the A and E, and found that the effect was small. The experimental sensitivity to this isotope is reduced since only 29.5% of the sample was Tl^{203}. No matter what value of $|O_1|$ we use for Tl^{203} (within the allowed range) our results are not significantly changed and those recorded in Table II are completely unchanged. Note that a_F is the mixing coefficient, $(1-a_F^2)$ representing the amount of mixing occurring.

[b] We have not renormalized to 120 muons; we are discussing $80(1+U)$ muons.

[c] See Fig. 1 for the definitions of c, E_x, b, and Δ. We have used the relation Energy shift $\equiv\pm\omega_F=\pm\frac{1}{2}y_F\Delta_F$. The energies for lines I and II are calculated as the following weighted average: $E_I=[\Sigma_{F,\text{isotopes}}E_IA_1+(E_4)_F(A_4)_F+(E_5)_F(A_5)_F][A_I]^{-1}$ and $E_{II}=[\Sigma_{F,\text{isotopes}}(E_2)_F(A_2)_F+(E_3)_F(A_3)_F][A_{II}]^{-1}$, functions of c, b, and Δ. Their difference is a function of b and Δ.

[d] Case I assumes that only radiative transitions occur; Case II assumes that the cause of the anomalous behavior in Bi acts also in Tl. We have defined U as the relative number of muons making radiative transitions from the $|2P_{1/2},0]$ to the $|1S_{1/2},0]$ state. The quantity $W(3D\rightarrow2P)$ represents the relative number of muons fed to the $2P_{1/2}$ state in the $3D\rightarrow2P$ transitions, the nucleus remaining in the ground state. We have for Case I: $y_1^2=24\pm12$ [which gives $y_2^2=1.92$, $a_1^2=0.6021$, $a_2^2=0.8608$, $\delta_1=0.0162$, $\delta_2=0.0030$, $\epsilon_1^-=0.047$, $\epsilon_2^-=0.052$, $\epsilon_1^+=0.029$, and $\epsilon_2^+=0.009$] for Tl^{205}. We have for Case II: $y_1^2=3.5\pm1.5$ [which gives $y_2^2=1.10$, $a_1^2=0.7673$, $a_2^2=0.9767$, $\delta_1\approx0.011$, $\delta_2\approx0.000$, $\epsilon_1^-=0.043$, $\epsilon_2^-=0.011$, $\epsilon_1^+=0.013$, and $\epsilon_2^+=0.000$] for Tl^{205}. Here the δ_F are computed assuming feeding from an $n=3$ level, and are really upper limits to the true values. The sensitivity of the results to the values used for δ_F is negligible. In both cases, for Tl^{203}, we have used $y_1^2=1.126$ [which gives $y_2^2=1.005$, $a_1^2=0.971$, $a_2^2=0.999$, and $\epsilon_F\approx0\approx\delta_F$]. The sensitivity of our results to our choice of the ϵ's and δ's for Tl^{203} is negligible in natural Tl.

[e] We set $(E_{II}-E_I)$, as a function of b and Δ, equal to $\Delta_{2P}=(187.6\pm4.3)$ keV as observed in the experiment. We then solve for b, using the relations: $\Delta=E_x-b$, and $E_x=(205\pm2)$ keV (as reported in Ref. 12). This gives $\Delta=(17.3\pm4.8)$ keV for Case I, and $\Delta=(17.7\pm4.9)$ keV for Case II. We then set E_{II} equal to the observed value, $E(2P_{3/2}-1S_{1/2})=(5.930\pm0.011)$ MeV, and solve for c. We find for Case I that $c=5.932$ MeV and for Case II that $c=5.931$ MeV, which are used along with Δ to calculate the energies.

ment with experiment $[W(2P\rightarrow1S)=0.97\pm0.09]$, we need $y_1^2(205)=24\pm12$ for Case I. Once $y_1^2(205)$ is determined, y_2^2, ω_F, a_F^2, δ_F, $\epsilon_F^\pm$, and the relative intensities may be calculated as described previously. The values of E_I and E_{II} may be determined (as functions of c and b) as described above Eq. (12); we use the known value[12] of E_x. We then set $(E_{II}-E_I)$, which is only a function of b, equal to the observed "fine-structure splitting" (Δ_{2P}) and solve for b. From Eqs. (4″) and (15), noting that $\Delta=E_x-b$, we find the required

TABLE II. Comparison of results for natural thallium.

Calculation	Fine structure splitting b (keV)	Off-diagonal matrix element[a] $\lvert O_1\rvert$ (keV)	Energy from β to $\lvert 1S_{1/2},0]$ c (MeV)
Experiment,[c] Case I: $U=0.5265$	187.7 ± 4.2	$42\ \pm17$	5.933 ± 0.011
Experiment,[c] Case II: $U=0.75$	187.3 ± 4.4	14.0 ± 5.9	5.932 ± 0.011
Theory	184.3[b]	$14.0\pm1.4\leq\lvert O_1\rvert\ll32.2\pm3.2$[d]	6.001 ± 0.050[b]

[a] The off-diagonal matrix element of the Hamiltonian (O_1) is for $F=1$ states; we have shown that the element for $F=2$, (O_2) is related to it by the equation $5|O_2|=|O_1|$. [See Eq. (15)].

[b] The theoretical values for b and c were reported in Ref. 1 and had been calculated by Ford and Wills.

[c] The spectra for these cases are in Table I.

[d] The value of $|O_1|$ is expected to be much closer to the lower limit (quadrupole distribution at radius R) than the extreme upper limit (quadrupole distribution at radius zero).

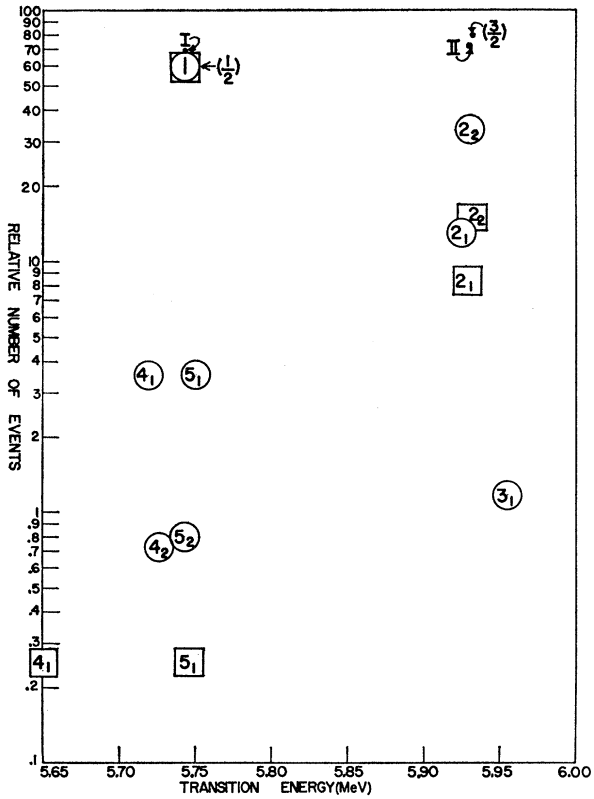

FIG. 3. Spectrum $2P \rightarrow 1S$ for natural thallium. Case II: $U=0.75$. The circles are for transitions in Tl^{205} and the squares are for those in Tl^{203}; the subscripts are F values. A circle and a square superimposed means the sum of the lines in both isotopes is being plotted. If we had assumed no mixing, we would have the lines indicated as (J) where J is the angular momentum of the initial $2P$ level. From Fig. 1 it can be seen that: $E(\frac{1}{2})=E_1$ and $E(\frac{3}{2})=c$. Lines I and II are the composite lines (averages of the true spectral lines).

The numbers are from Table I and there is an uncertainty of ± 0.011 MeV in the absolute scale.

The total number of muons is $80(1+U)$.

value for the off-diagonal matrix elements of the Hamiltonian ($|O_F|$). We determine c by demanding that E_{II} be equal to the observed $E(2P_{3/2}-1S_{1/2})$. If we assume that the unknown effect, which causes Bi^{209} to have $W(2P \rightarrow 1S)=0.75$, is acting in thallium and U is 0.75, we find that $[y_1^2(205)=3.5\pm 1.5]$ gives agreement with experiment (Case II). The justification for this assumption is the fact that Tl is one proton below and Bi is one proton above a magic number closed shell (82). In Pb this effect must be absent in order to agree with experiment $[W(2P \rightarrow 1S)=0.49\pm 0.07]$, which we suppose is due to the fact that the nucleus has a magic number closed shell (82 protons). See Table I and Figs. 2 and 3 for the spectra. See Table II for a comparison of the predicted values of $|O_F|$, b, and c with the values expected from theory.

VI. RESULTS FOR THALLIUM

Figures 2 and 3 and Tables I and II show the results of this investigation. The predicted values of b agree with that value calculated by Ford and Wills[1] (within experimental error), and the predicted and calculated values of c agree within 1.2 standard deviations. Cases I and II make radically different predictions for $|O_1|$, however. Case I predicts an $|O_1|$ which misses agreement with theory by less than 2 standard deviations, whereas the $|O_1|$ predicted for Case II shows excellent agreement with theory. [The closeness of agreement depends upon the accuracy of the value of Δ; in order to know Δ within 10% we must know b to better than 1%. In lieu of this knowledge we have used the experimentally determined b, which is in agreement (within experimental error) with the theoretically calculated value.]

For Case I we have assumed that U equals $W(3D \rightarrow 2P)$. If there were *random* feeding of the $2P$ level we might expect the sum rule prediction, that U equals $\frac{1}{2}$, to be the case. This would give the experimentally required value of $|O_1|$ as 44 ± 18, also about 2 standard deviations from the theoretical expectation. If we assume $|O_1|=14.0\pm 1.4$ keV, then the experimentally determined value of b implies: $W(2P \rightarrow 1S)=0.72\pm 0.05$ for Case I and $W(2P \rightarrow 1S)=0.97\pm 0.05$ for Case II. These are to be compared with the observed value: $W(2P \rightarrow 1S)=0.97\pm 0.09$. Case I misses agreement by 2 standard deviations, whereas Case II shows agreement, as above.

The fact that Case I misses agreement with theory by 2 standard deviations is not convincing evidence that there must be another effect involved, nor is the agreement of Case II with theory. We might be led to question our means of averaging the spectrum into two composite lines. (The lines of appreciable intensity are shifted from the composite lines by less than $\frac{1}{3}$ the fine-structure splitting. Therefore, if we had put in line shapes and then let the computer average the resulting spectrum into two lines, the resulting composite lines would not be too different from those obtained above.) However, the resonance phenomenon is negligible in Bi^{209} but[1] $W(2P \rightarrow 1S)=0.75\pm 0.05$ [equals U, viz., discussion after Eq. (12)], and the assumption of the existence of a similar, unknown effect in thallium (Case II) gives us agreement with experiment. These two circumstances, together, may be taken as an indication that something besides radiative transitions is taking place in these nuclei [one proton (Bi) or one hole (Tl) above the closed proton shell (82)]. For Pb, a magic number nucleus, the unknown effect must be negligible.

ACKNOWLEDGMENTS

I wish to express my indebtedness to Professor J. Rainwater for suggesting this problem and the mechanism of solution, and providing information about and insight into the experiment performed. I am deeply grateful to Professor R. Serber for acquainting me with the problem, and providing numerous discussions and suggestions concerning the theoretical approach. The form and scope of this report were determined with Professor R. Serber's guidance.

APPENDIX: NONRESONANT EFFECTS

The effect of nonresonant hyperfine mixing or a possible nuclear Auger effect[13] on the relative number of radiative transitions from a set of levels $((nL_J,N))$ to the levels $((n'L'_{J'},N'))$ is to be investigated.

The true eigenstates of our Hamiltonian may be written

$$((nL_J{}^M,N)) = (1-\textstyle\sum_{N',\alpha'}|S_{NN'}(\alpha,\alpha')|^2)^{1/2}|nL_J{}^M,N] + \textstyle\sum_{N',\alpha'} S_{NN'}(\alpha,\alpha')|\alpha',N'], \quad \text{(A1)}$$

where α represents the quantum numbers n, L, J, and M of the muon, M means J_z, and the prime refers to the quantum numbers of the functions mixed in by the hyperfine interaction. The $S_{NN'}(\alpha,\alpha')$ are completely determined by the interaction. There are a finite number of nuclear states for which the level $((1S_{1/2},N))$ lies below the $((2P_J,0))$ levels. Likewise, there are only a finite number of levels which can bleed the $((2P_J,0))$ levels. The effects of such states (sum effect) have been shown to be negligible.

We had been working previously in a representation in which the wave functions were eigenfunctions of F. The lifting of the F degeneracy by this interaction is negligible; thus, when we finally sum over all the states of a given n, L, and N, the result will not depend upon which representation is used since they are related by a unitary transformation. We may use, therefore, product wave functions

$$|nL_J{}^M,N] = |nL_J{}^M\rangle|N\rangle. \quad \text{(A2)}$$

We further assume that the energy differences involved are independent of J, which is approximately true.

[13] Suggested by J. Rosen (private communication).

The $S_{NN'}(\alpha,\alpha')$, as well as the operators for radiative or nuclear Auger transitions, may be written as sums of products of spin-independent operators in the muon coordinates with operators in the nuclear coordinates. The transition matrix element (T.M.E.) from $((nL_J,N))$ to $((n'L'_{J'},N'))$, via radiative or nuclear Auger transitions, may be shown to have the same J dependence:

$$\text{T.M.E.} = [(2J'+1)(2J+1)]^{1/2} \times \textstyle\sum_{p,\gamma} \begin{Bmatrix} J & J' & p \\ L' & L & S \end{Bmatrix} \begin{pmatrix} J & J' & p \\ -M & M' & \gamma \end{pmatrix} H, \quad \text{(A3)}$$

where $|H|$ is independent of J, M and J', M'. The p and γ depend upon the operators and intermediate states involved, and S is $\frac{1}{2}$. Employing the orthogonality properties of the 3-j and 6-j symbols[5] we find

$$\textstyle\sum_{J'MM'}|\text{T.M.E.}|^2 = (2J+1)G, \quad \text{(A4)}$$

with G independent of J.[14]

Thus, the nonresonant hyperfine mixing cannot affect the relative number of radiative transitions, as long as the interaction is small enough so that J is still a relatively good quantum number. The $3D \rightarrow 2P$ transitions show that the levels *are* grouped in the way expected if J were a good number.

Since the relative number of possible Auger transitions is proportional to $(2J+1)$, the relative number of muons remaining is unchanged from the value expected in the absence of such an effect. The relative number of radiative transitions is thus unaffected.

[14] The existence of such a theorem was recognized many years ago. See J. H. Van Vleck, *Electric and Magnetic Susceptibilities* (Oxford University Press, London, 1932), p. 195.